阅读申明

1.本站收集的数据手册和产品资料都来自互联网，版权归原作者所有。如读者和版权方有任何异议请及时告之，我们将妥善解决。
2.本站提供的中文数据手册是英文数据手册的中文翻译，其目的是协助用户阅读，该译文无法自动跟随原稿更新，同时也可能存在翻译上的不当。建议读者以英文原稿为参考以便获得更精准的信息。
3.本站提供的产品资料，来自厂商的技术支持或者使用者的心得体会等，其内容可能存在描叙上的差异，建议读者做出适当判断。
4.如需与我们联系，请发邮件到marketing@iczoom.com，主题请标有“数据手册”字样。

Read Statement

1. The datasheets and other product information on the site are all from network reference or other public materials, and the copyright belongs to the original author and original published source. If readers and copyright owners have any objections, please contact us and we will deal with it in a timely manner.

2. The Chinese datasheets provided on the website is a Chinese translation of the English datasheets. Its purpose is for reader’s learning exchange only and do not involve commercial purposes. The translation cannot be automatically updated with the original manuscript, and there may also be improper translations. Readers are advised to use the English manuscript as a reference for more accurate information.

3. All product information provided on the website refer to solutions from manufacturers’ technical support or users the contents may have differences in description, and readers are advised to take the original article as the standard.

4. If you have any questions, please contact us at marketing@iczoom.com and mark the subject with “Datasheets”.

Downloaded from www.iczoom.com

FAIRCHILD SEMICONDUCTOR®

August 2001
Revised October 2006

FSTUD32450
Configurable 4-Bit to 40-Bit Bus Switch with −2V Undershoot Protection and Selectable Level Shifting

General Description

The Fairchild Universal Bus Switch FSTUD32450 provides 4-bit, 5-bit, 8-bit, 10-bit, 16-bit, 20-bit...40-bit of high-speed CMOS TTL-compatible bus switching. The low On Resistance of the switch allows inputs to be connected to outputs without adding propagation delay or generating additional ground bounce noise.

The FSTUD32450 is designed to allow "customer" configuration control of the enable connections. The device can be organized as either a ten 4-bit, eight 5-bit, four 10-bit, two 20-bit or one 40-bit enabled bus switch. Also achievable are 8-bit and 16-bit enabled configurations (see Functional Description). The device's bit configuration is controlled through select pin logic. (see Truth Table). When $\overline{OE}_x$ is LOW, Port A_x is connected to Port B_x. When $\overline{OE}_x$ is HIGH, the switch is OPEN.

The A and B Ports are protected against undershoot to support an extended range to 2.0V below ground. Fairchild's integrated Undershoot Hardened Circuit (UHC®™) senses undershoot at the I/O, and responds by preventing voltage differentials from developing and turning the switch on.

Another innovative device feature is the addition of a level shifting select pin, "S_2 and S_5". When S_2 and S_5 are LOW, the device behaves as a standard N-MOS switch. When S_2 and S_5 are HIGH, a diode to V_{CC} is integrated into the circuit allowing for level shifting between 5V inputs and 3.3V outputs.

Features

- Undershoot protected to −2V (A and B Ports)
- Voltage level shifting
- 4Ω switch connection between two ports
- Minimal propagation delay through the switch
- Low I_{CC}
- Zero bounce in flow-through mode
- Control inputs compatible with TTL level
- See Applications Notes AN-5008 and AN-5021 for UHC details
- Packaged in plastic Fine-Pitch Ball Grid Array (FBGA)

Applications Note

Select pins S_0, S_1, S_2, S_3, S_4 and S_5 are intended to be used as static user configurable control pins. The AC performance of these pins has not been characterized or tested. Switching of these select pins during system operation may temporarily disrupt output logic states and/or enable pin controls.

40-bit configuration can be achieved by connecting the $\overline{OE}_1$ and the $\overline{OE}_6$ pins to together.

Ordering Code:

Order Number	Package Number	Package Description
FSTUD32450G (Note 1)(Note 2)	BGA114A	114-Ball Fine-Pitch Ball Grid Array (FBGA), JEDEC MO-205, 5.5mm Wide

Note 1: Ordering code "G" indicates Trays.

Note 2: Devices also available in Tape and Reel. Specify by appending the suffix letter "X" to the ordering code.

UHC®™ is a registered trademark of Fairchild Semiconductor Corporation.

Connection Diagram

Pin Assignment for FBGA

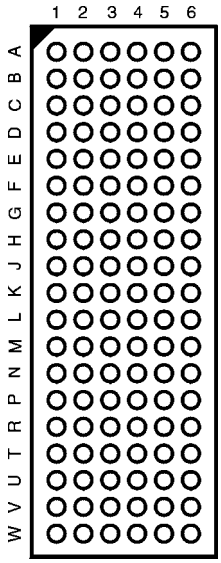

(Top Thru View)

Pin Descriptions

Pin Name	Description
$\overline{OE}_1$, $\overline{OE}_2$, $\overline{OE}_3$, $\overline{OE}_4$, $\overline{OE}_5$, $\overline{OE}_6$, $\overline{OE}_7$, $\overline{OE}_8$ $\overline{OE}_9$, $\overline{OE}_{10}$	Bus Switch Enables
1A, 2A, 3A, 4A	Bus A
1B, 2B, 3B, 4B	Bus B
S_0, S_1, S_3, S_4	Bit Configuration Enables
S_2, S_5	Level Shifting Diode Enables

FBGA Pin Assignments

	1	2	3	4	5	6
A	$1A_4$	$1A_2$	$\overline{OE}_1$	$\overline{OE}_2$	$1B_2$	$1B_4$
B	$1A_6$	$1A_5$	$1A_1$	$1B_1$	$1B_5$	$1B_6$
C	$1A_8$	$1A_7$	$1A_3$	$1B_3$	$1B_7$	$1B_8$
D	$1A_{10}$	$1A_9$	GND	$\overline{OE}_5$	$1B_9$	$1B_{10}$
E	$2A_2$	$2A_1$	S_0	V_{CC}	$2B_1$	$2B_2$
F	$2A_4$	$2A_3$	S_1	S_2	$2B_3$	$2B_4$
G	$2A_6$	$2A_5$	V_{CC}	GND	$2B_5$	$2B_6$
H	$2A_8$	$2A_7$	GND	GND	$2B_7$	$2B_8$
J	$2A_{10}$	$2A_9$	GND	GND	$2B_9$	$2B_{10}$
K	$\overline{OE}_4$	$\overline{OE}_8$	GND	GND	$\overline{OE}_9$	$\overline{OE}_3$
L	$3A_{10}$	$3A_9$	GND	GND	$3B_9$	$3B_{10}$
M	$3A_8$	$3A_7$	GND	GND	$3B_7$	$3B_8$
N	$3A_6$	$3A_5$	GND	V_{CC}	$3B_5$	$3B_6$
P	$3A_4$	$3A_3$	S_5	S_4	$3B_3$	$3B_4$
R	$3A_2$	$3A_1$	V_{CC}	S_3	$3B_1$	$3B_2$
T	$4A_{10}$	$4A_9$	$\overline{OE}_{10}$	GND	$4B_9$	$4B_{10}$
U	$4A_8$	$4A_7$	$4A_3$	$4B_3$	$4B_7$	$4B_8$
V	$4A_6$	$4A_5$	$4A_1$	$4B_1$	$4B_5$	$4B_6$
W	$4A_4$	$4A_2$	$\overline{OE}_7$	$\overline{OE}_6$	$4B_2$	$4B_4$

Logic Diagrams

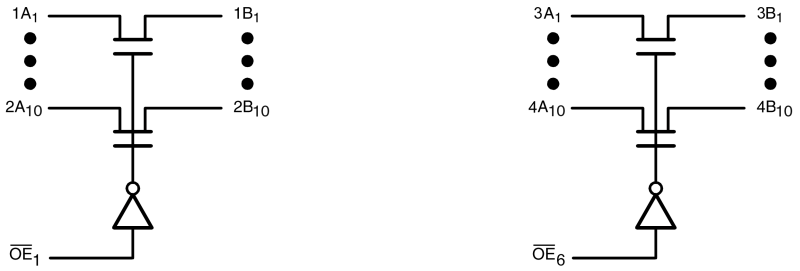

20-Bit Configuration

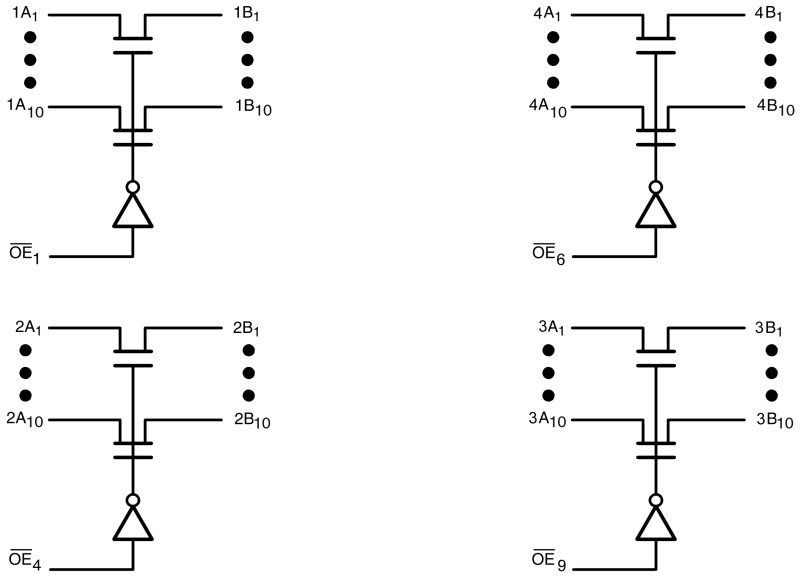

10-Bit Configuration

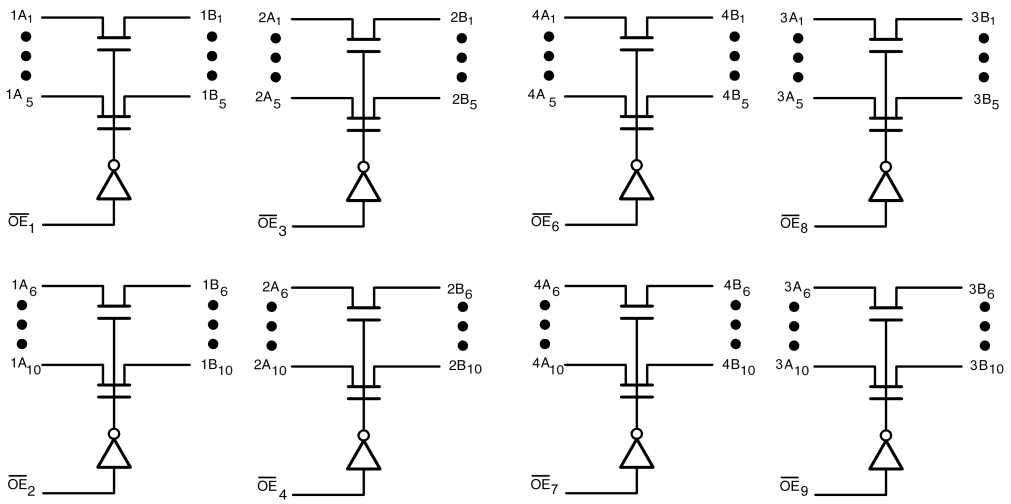

5-Bit Configuration

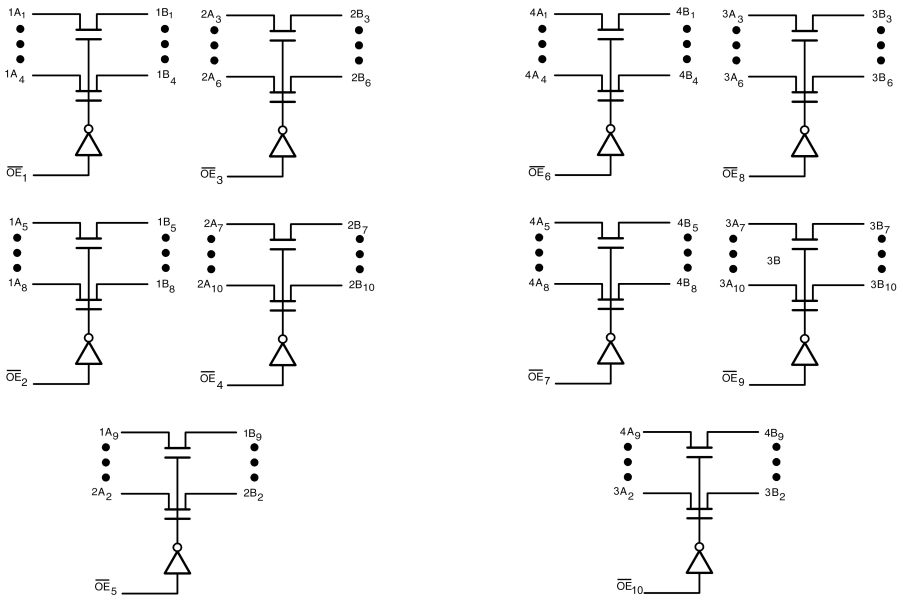

4-Bit Configuration

Functional Description

The device can also be configured as an 8 and 16-bit device by grounding the unused pins in Configurations 2 and 1 respectively. The 8-bit configuration may also be achieved by tying two of the 4-bit enables from configuration together and tying the remaining enable pin ($\overline{OE}$) HIGH.

Truth Tables (X = V_{CC} or GND)

(see Functional Description)

Select Pin	
S_2, S_5	**Mode**
L	Std. NMOS Switch
H	Level Shifting Diode Enabled

20-Bit Configuration (S_0 = S_1 = L)

Inputs					Inputs/Outputs
$\overline{OE}_1$	$\overline{OE}_2$	$\overline{OE}_3$	$\overline{OE}_4$	$\overline{OE}_5$	
L	X	X	X	X	$1A_{1-10} = 1B_{1-10}$, $2A_{1-10} = 2B_{1-10}$
H	X	X	X	X	Z
S_3 = S_4 = L					
Inputs					**Inputs/Outputs**
$\overline{OE}_6$	$\overline{OE}_7$	$\overline{OE}_8$	$\overline{OE}_9$	$\overline{OE}_{10}$	
L	X	X	X	X	$3A_{1-10} = 3B_{1-10}$, $4A_{1-10} = 4B_{1-10}$
H	X	X	X	X	Z

10-Bit Configuration (S_0 = L, S_1 = H)

Inputs					Inputs/Outputs	
$\overline{OE}_1$	$\overline{OE}_2$	$\overline{OE}_3$	$\overline{OE}_4$	$\overline{OE}_5$	**$1A_{1-10} = 1B_{1-10}$**	**$2A_{1-10} = 2B_{1-10}$**
L	X	X	L	X	$1A_X = 1B_X$	$2A_X = 2B_X$
L	X	X	H	X	$1A_X = 1B_X$	Z
H	X	X	L	X	Z	$2A_X = 2B_X$
H	X	X	H	X	Z	Z
S_3 = L, S_4 = H						
Inputs					**Inputs/Outputs**	
$\overline{OE}_6$	$\overline{OE}_7$	$\overline{OE}_8$	$\overline{OE}_9$	$\overline{OE}_{10}$	**$4A_{1-10} = 4B_{1-10}$**	**$3A_{1-10} = 3B_{1-10}$**
L	X	X	L	X	$4A_X = 4B_X$	$3A_X = 3B_X$
L	X	X	H	X	$4A_X = 4B_X$	Z
H	X	X	L	X	Z	$3A_X = 3B_X$
H	X	X	H	X	Z	Z

Truth Tables (Continued)

5-Bit Configuration (S_0 = H, S_1 = L)

Inputs					Inputs/Outputs			
$\overline{OE}_1$	$\overline{OE}_2$	$\overline{OE}_3$	$\overline{OE}_4$	$\overline{OE}_5$	$1A_{1-5}$, $1B_{1-5}$	$1A_{6-10}$, $1B_{6-10}$	$2A_{1-5}$, $2B_{1-5}$	$2A_{6-10}$, $2B_{6-10}$
L	L	L	L	X	$1A_x = 1B_x$	$1A_y = 1B_y$	$2A_x = 2B_x$	$2A_y = 2B_y$
L	L	L	H	X	$1A_x = 1B_x$	$1A_y = 1B_y$	$2A_x = 2B_x$	Z
L	L	H	L	X	$1A_x = 1B_x$	$1A_y = 1B_y$	Z	$2A_y = 2B_y$
L	L	H	H	X	$1A_x = 1B_x$	$1A_y = 1B_y$	Z	Z
L	H	L	L	X	$1A_x = 1B_x$	Z	$2A_x = 2B_x$	$2A_y = 2B_y$
L	H	L	H	X	$1A_x = 1B_x$	Z	$2A_x = 2B_x$	Z
L	H	H	L	X	$1A_x = 1B_x$	Z	Z	$2A_y = 2B_y$
L	H	H	H	X	$1A_x = 1B_x$	Z	Z	Z
H	L	L	L	X	Z	$1A_y = 1B_y$	$2A_x = 2B_x$	$2A_y = 2B_y$
H	L	L	H	X	Z	$1A_y = 1B_y$	$2A_x = 2B_x$	Z
H	L	H	L	X	Z	$1A_y = 1B_y$	Z	$2A_y = 2B_y$
H	L	H	H	X	Z	$1A_y = 1B_y$	Z	Z
H	H	L	L	X	Z	Z	$2A_x = 2B_x$	$2A_y = 2B_y$
H	H	L	H	X	Z	Z	$2A_x = 2B_x$	Z
H	H	H	L	X	Z	Z	Z	$2A_y = 2B_y$
H	H	H	H	X	Z	Z	Z	Z
S_3 = H, S_4 = L								
Inputs					**Inputs/Outputs**			
$\overline{OE}_6$	$\overline{OE}_7$	$\overline{OE}_8$	$\overline{OE}_9$	$\overline{OE}_{10}$	$4A_{1-5}$, $4B_{1-5}$	$4A_{6-10}$, $4B_{6-10}$	$3A_{1-5}$, $3B_{1-5}$	$3A_{6-10}$, $3B_{6-10}$
L	L	L	L	X	$4A_x = 4B_x$	$4A_y = 4B_y$	$3A_x = 3B_x$	$3A_y = 3B_y$
L	L	L	H	X	$4A_x = 4B_x$	$4A_y = 4B_y$	$3A_x = 3B_x$	Z
L	L	H	L	X	$4A_x = 4B_x$	$4A_y = 4B_y$	Z	$3A_y = 3B_y$
L	L	H	H	X	$4A_x = 4B_x$	$4A_y = 4B_y$	Z	Z
L	H	L	L	X	$4A_x = 4B_x$	Z	$3A_x = 3B_x$	$3A_y = 3B_y$
L	H	L	H	X	$4A_x = 4B_x$	Z	$3A_x = 3B_x$	Z
L	H	H	L	X	$4A_x = 4B_x$	Z	Z	$3A_y = 3B_y$
L	H	H	H	X	$4A_x = 4B_x$	Z	Z	Z
H	L	L	L	X	Z	$4A_y = 4B_y$	$3A_x = 3B_x$	$3A_y = 3B_y$
H	L	L	H	X	Z	$4A_y = 4B_y$	$3A_x = 3B_x$	Z
H	L	H	L	X	Z	$4A_y = 4B_y$	Z	$3A_y = 3B_y$
H	L	H	H	X	Z	$4A_y = 4B_y$	Z	Z
H	H	L	L	X	Z	Z	$3A_x = 3B_x$	$3A_y = 3B_y$
H	H	L	H	X	Z	Z	$3A_x = 3B_x$	Z
H	H	H	L	X	Z	Z	Z	$3A_y = 3B_y$
H	H	H	H	X	Z	Z	Z	Z

Truth Tables (Continued)

4-Bit Configuration ($S_0 = S_1 = H$)

Inputs					Inputs/Outputs				
OE_1	OE_2	OE_3	OE_4	OE_5	$1A_{1-4}$, $1B_{1-4}$	$1A_{5-8}$, $1B_{5-8}$	$2A_{3-6}$, $2B_{3-6}$	$2A_{7-10}$, $2B_{7-10}$	$1A_{9-10}$, $2B_{9-10}$ $2A_{1-2}$, $2B_{1-2}$
L	L	L	L	L	$1A_x = 1B_x$	$1A_y = 1B_y$	$2A_x = 2B_x$	$2A_y = 2B_y$	$1A_z = 1B_z$ $2A_z = 2B_z$
L	L	L	L	H	$1A_x = 1B_x$	$1A_y = 1B_y$	$2A_x = 2B_x$	$2A_y = 2B_y$	Z
L	L	L	H	L	$1A_x = 1B_x$	$1A_y = 1B_y$	$2A_x = 2B_x$	Z	$1A_z = 1B_z$ $2A_z = 2B_z$
L	L	L	H	H	$1A_x = 1B_x$	$1A_y = 1B_y$	$2A_x = 2B_x$	Z	Z
L	L	H	L	L	$1A_x = 1B_x$	$1A_y = 1B_y$	Z	$2A_y = 2B_y$	$1A_z = 1B_z$ $2A_z = 2B_z$
L	L	H	L	H	$1A_x = 1B_x$	$1A_y = 1B_y$	Z	$2A_y = 2B_y$	Z
L	L	H	H	L	$1A_x = 1B_x$	$1A_y = 1B_y$	Z	Z	$1A_z = 1B_z$ $2A_z = 2B_z$
L	L	H	H	H	$1A_x = 1B_x$	$1A_y = 1B_y$	Z	Z	Z
L	H	L	L	L	$1A_x = 1B_x$	Z	$2A_x = 2B_x$	$2A_y = 2B_y$	$1A_z = 1B_z$ $2A_z = 2B_z$
L	H	L	L	H	$1A_x = 1B_x$	Z	$2A_x = 2B_x$	$2A_y = 2B_y$	Z
L	H	L	H	L	$1A_x = 1B_x$	Z	$2A_x = 2B_x$	Z	$1A_z = 1B_z$ $2A_z = 2B_z$
L	H	L	H	H	$1A_x = 1B_x$	Z	$2A_x = 2B_x$	Z	Z
L	H	H	L	L	$1A_x = 1B_x$	Z	Z	$2A_y = 2B_y$	$1A_z = 1B_z$ $2A_z = 2B_z$
L	H	H	L	H	$1A_x = 1B_x$	Z	Z	$2A_y = 2B_y$	Z
L	H	H	H	L	$1A_x = 1B_x$	Z	Z	Z	$1A_z = 1B_z$ $2A_z = 2B_z$
L	H	H	H	H	$1A_x = 1B_x$	Z	Z	Z	Z
H	L	L	L	L	Z	$1A_y = 1B_y$	$2A_x = 2B_x$	$2A_y = 2B_y$	$1A_z = 1B_z$ $2A_z = 2B_z$
H	L	L	L	H	Z	$1A_y = 1B_y$	$2A_x = 2B_x$	$2A_y = 2B_y$	Z
H	L	L	H	L	Z	$1A_y = 1B_y$	$2A_x = 2B_x$	Z	$1A_z = 1B_z$ $2A_z = 2B_z$
H	L	L	H	H	Z	$1A_y = 1B_y$	$2A_x = 2B_x$	Z	Z
H	L	H	L	L	Z	$1A_y = 1B_y$	Z	$2A_y = 2B_y$	$1A_z = 1B_z$ $2A_z = 2B_z$
H	L	H	L	H	Z	$1A_y = 1B_y$	Z	$2A_y = 2B_y$	Z
H	L	H	H	L	Z	$1A_y = 1B_y$	Z	Z	$1A_z = 1B_z$ $2A_z = 2B_z$
H	L	H	H	H	Z	$1A_y = 1B_y$	Z	Z	Z
H	H	L	L	L	Z	Z	$2A_x = 2B_x$	$2A_y = 2B_y$	$1A_z = 1B_z$ $2A_z = 2B_z$
H	H	L	L	H	Z	Z	$2A_x = 2B_x$	$2A_y = 2B_y$	Z
H	H	L	H	L	Z	Z	$2A_x = 2B_x$	Z	$1A_z = 1B_z$ $2A_z = 2B_z$
H	H	L	H	H	Z	Z	$2A_x = 2B_x$	Z	Z
H	H	H	L	L	Z	Z	Z	$2A_y = 2B_y$	$1A_z = 1B_z$ $2A_z = 2B_z$
H	H	H	L	H	Z	Z	Z	$2A_y = 2B_y$	Z
H	H	H	H	L	Z	Z	Z	Z	$1A_z = 1B_z$ $2A_z = 2B_z$
H	H	H	H	H	Z	Z	Z	Z	Z

Truth Tables (Continued)

4-Bit Configuration (continued)

$S_3 = S_4 = H$									
Inputs					**Inputs/Outputs**				
OE_6	OE_7	OE_8	OE_9	OE_{10}	$4A_{1-4}$, $4B_{1-4}$	$4A_{5-8}$, $4B_{5-8}$	$3A_{3-6}$, $3B_{3-6}$	$3A_{7-10}$, $3B_{7-10}$	$3A_{1-2}$, $3B_{1-2}$ $4A_{9-10}$, $3B_{9-10}$
L	L	L	L	L	$4A_x = 4B_x$	$4A_y = 4B_y$	$3A_x = 3B_x$	$3A_y = 3B_y$	$3A_z = 3B_z$ $4A_z = 4B_z$
L	L	L	L	H	$4A_x = 4B_x$	$4A_y = 4B_y$	$3A_x = 3B_x$	$3A_y = 3B_y$	Z
L	L	L	H	L	$4A_x = 4B_x$	$4A_y = 4B_y$	$3A_x = 3B_x$	Z	$3A_z = 3B_z$ $4A_z = 4B_z$
L	L	L	H	H	$4A_x = 4B_x$	$4A_y = 4B_y$	$3A_x = 3B_x$	Z	Z
L	L	H	L	L	$4A_x = 4B_x$	$4A_y = 4B_y$	Z	$3A_y = 3B_y$	$3A_z = 3B_z$ $4A_z = 4B_z$
L	L	H	L	H	$4A_x = 4B_x$	$4A_y = 4B_y$	Z	$3A_y = 3B_y$	Z
L	L	H	H	L	$4A_x = 4B_x$	$4A_y = 4B_y$	Z	Z	$3A_z = 3B_z$ $4A_z = 4B_z$
L	L	H	H	H	$4A_x = 4B_x$	$4A_y = 4B_y$	Z	Z	Z
L	H	L	L	L	$4A_x = 4B_x$	Z	$3A_x = 3B_x$	$3A_y = 3B_y$	$3A_z = 3B_z$ $4A_z = 4B_z$
L	H	L	L	H	$4A_x = 4B_x$	Z	$3A_x = 3B_x$	$3A_y = 3B_y$	Z
L	H	L	H	L	$4A_x = 4B_x$	Z	$3A_x = 3B_x$	Z	$3A_z = 3B_z$ $4A_z = 4B_z$
L	H	L	H	H	$4A_x = 4B_x$	Z	$3A_x = 3B_x$	Z	Z
L	H	H	L	L	$4A_x = 4B_x$	Z	Z	$3A_y = 3B_y$	$3A_z = 3B_z$ $4A_z = 4B_z$
L	H	H	L	H	$4A_x = 4B_x$	Z	Z	$3A_y = 3B_y$	Z
L	H	H	H	L	$4A_x = 4B_x$	Z	Z	Z	$3A_z = 3B_z$ $4A_z = 4B_z$
L	H	H	H	H	$4A_x = 4B_x$	Z	Z	Z	Z
H	L	L	L	L	Z	$4A_y = 4B_y$	$3A_x = 3B_x$	$3A_y = 3B_y$	$3A_z = 3B_z$ $4A_z = 4B_z$
H	L	L	L	H	Z	$4A_y = 4B_y$	$3A_x = 3B_x$	$3A_y = 3B_y$	Z
H	L	L	H	L	Z	$4A_y = 4B_y$	$3A_x = 3B_x$	Z	$3A_z = 3B_z$ $4A_z = 4B_z$
H	L	L	H	H	Z	$4A_y = 4B_y$	$3A_x = 3B_x$	Z	Z
H	L	H	L	L	Z	$4A_y = 4B_y$	Z	$3A_y = 3B_y$	$3A_z = 3B_z$ $4A_z = 4B_z$
H	L	H	L	H	Z	$4A_y = 4B_y$	Z	$3A_y = 3B_y$	Z
H	L	H	H	L	Z	$4A_y = 4B_y$	Z	Z	$3A_z = 3B_z$ $4A_z = 4B_z$
H	L	H	H	H	Z	$4A_y = 4B_y$	Z	Z	Z
H	H	L	L	L	Z	Z	$3A_x = 3B_x$	$3A_y = 3B_y$	$3A_z = 3B_z$ $4A_z = 4B_z$
H	H	L	L	H	Z	Z	$3A_x = 3B_x$	$3A_y = 3B_y$	Z
H	H	L	H	L	Z	Z	$3A_x = 3B_x$	Z	$3A_z = 3B_z$ $4A_z = 4B_z$
H	H	L	H	H	Z	Z	$3A_x = 3B_x$	Z	Z
H	H	H	L	L	Z	Z	Z	$3A_y = 3B_y$	$3A_z = 3B_z$ $4A_z = 4B_z$
H	H	H	L	H	Z	Z	Z	$3A_y = 3B_y$	Z
H	H	H	H	L	Z	Z	Z	Z	$3A_z = 3B_z$ $4A_z = 4B_z$
H	H	H	H	H	Z	Z	Z	Z	Z

Absolute Maximum Ratings (Note 3)

Supply Voltage (V_{CC})	−0.5V to +7.0V
DC Switch Voltage (V_S) (Note 4)	−2.0V to +7.0V
DC Input Control Pin Voltage (V_{IN}) (Note 5)	−0.5V to +7.0V
DC Input Diode Current (I_{IK}) $V_{IN} < 0V$	−50 mA
DC Output (I_{OUT}) Current	128 mA
DC V_{CC}/GND Current (I_{CC}/I_{GND})	+/− 100 mA
Storage Temperature Range (T_{STG})	−65°C to +150 °C

Recommended Operating Conditions (Note 6)

Power Supply Operating (V_{CC})	4.0V to 5.5V
Input Voltage (V_{IN})	0V to 5.5V
Output Voltage (V_{OUT})	0V to 5.5V
Free Air Operating Temperature (T_A)	-40 °C to +85 °C

Note 3: The "Absolute Maximum Ratings" are those values beyond which the safety of the device cannot be guaranteed. The device should not be operated at these limits. The parametric values defined in the Electrical Characteristics tables are not guaranteed at the absolute maximum rating. The "Recommended Operating Conditions" table will define the conditions for actual device operation.

Note 4: V_S is the voltage observed/applied at either the A or B Ports across the switch.

Note 5: The input and output negative voltage ratings may be exceeded if the input and output diode current ratings are observed.

Note 6: Unused control inputs must be held HIGH or LOW. They may not float.

DC Electrical Characteristics

Symbol	Parameter	V_{CC} (V)	T_A = −40 °C to +85 °C Min	Typ (Note 7)	Max	Units	Conditions
V_{IK}	Clamp Diode Voltage	4.5			−1.2	V	I_{IN} = −18 mA
V_{IH}	HIGH Level Input Voltage	4.0-5.5	2.0			V	IF S_2 = HIGH 4.5V ≤ V_{CC} ≤ 5.5V
V_{IL}	LOW Level Input Voltage	4.0-5.5			0.8	V	IF S_2 = HIGH 4.5V ≤ V_{CC} ≤ 5.5V
V_{OH}	HIGH Level Output Voltage	4.5-5.5	See Figure 4			V	$S_2 = S_5 = V_{CC}$
I_I	Input Leakage Current	5.5			±1.0	μA	0 ≤ V_{IN} ≤ 5.5V
		0			10	μA	V_{IN} = 5.5V
I_{OZ}	OFF-STATE Leakage Current	5.5			±1.0	μA	0 ≤ A, B ≤ V_{CC}
R_{ON}	Switch On Resistance (Note 8)	4.5		4	7	Ω	V_{IN} = 0V, I_{IN} = 64 mA, $S_2 = S_5$ = 0V or V_{CC}
		4.5		4	7	Ω	V_{IN} = 0V, I_{IN} = 30 mA, $S_2 = S_5$ = 0V or V_{CC}
		4.5		8	12	Ω	V_{IN} = 2.4V, I_{IN} = 15 mA, $S_2 = S_5$ = 0V
		4.0		11	20	Ω	V_{IN} = 2.4V, I_{IN} = 15 mA, $S_2 = S_5$ = 0V
		4.5		35	50	Ω	V_{IN} = 2.4V, I_{IN} = 15 mA, $S_2 = S_5 = V_{CC}$
I_{CC}	Quiescent Supply Current	5.5			3	μA	$S_2 = S_5$ = GND, $V_{IN} = V_{CC}$ or GND, I_{OUT} = 0
					10	μA	$S_2 = S_5 = V_{CC}$, $\overline{OE}_x = V_{CC}$, $V_{IN} = V_{CC}$ or GND, I_{OUT} = 0
					1.5	mA	$S_2 = S_5 = V_{CC}$, $\overline{OE}_x$ = GND, $V_{IN} = V_{CC}$ or GND, I_{OUT} = 0
I_{CCT}	Increase in I_{CC} per Control Input	5.5			2.5	mA	One Control Input at 3.4V Other Inputs at V_{CC} or GND, S_2 = 0V
					4.0	mA	One Control Input at 3.4V Other Inputs at V_{CC} or GND, $S_2 = V_{CC}$
V_{IKU}	Voltage Undershoot	5.5			−2.0	V	0.0 mA ≥ I_{IN} ≥ −50 mA $\overline{OE}_x$ = 5.5V

Note 7: Typical values are at V_{CC} = 5.0V and T_A = +25°C

Note 8: Measured by the voltage drop between A and B pins at the indicated current through the switch. On Resistance is determined by the lower of the voltages on the two (A or B) pins.

AC Electrical Characteristics

Symbol	Parameter	T_A = −40 °C to +85 °C, C_L = 50pF, RU = RD = 500Ω				Units	Conditions (S_2 = S_5 = 0V)	Figure Number
		V_{CC} = 4.5 – 5.5V		V_{CC} = 4.0V				
		Min	Max	Min	Max			
t_{PHL}, t_{PLH}	Propagation Delay Bus-to-Bus (Note 9)		0.25		0.25	ns	V_I = OPEN	Figures 2, 3
t_{PZH}, t_{PZL}	Output Enable Time	1.5	6.5		7.0	ns	V_I = 7V for t_{PZL} V_I = OPEN for t_{PZH}	Figures 2, 3
t_{PHZ}, t_{PLZ}	Output Disable Time	1.5	6.7		7.2	ns	V_I = 7V for t_{PLZ} V_I = OPEN for t_{PHZ}	Figures 2, 3
t_{PZH}, t_{PZL}	S_{el} ($S_{0,1}$) to Output Enable Time	1.5	7.0		7.5	ns	V_I = 7V for t_{PZL} V_I = OPEN for t_{PZH}	Figures 2, 3
t_{PHZ}, t_{PLZ}	S_{el} ($S_{0,1}$) to Output Disable Time	1.5	7.5		7.7	ns	V_I = 7V for t_{PLZ} V_I = OPEN for t_{PHZ}	Figures 2, 3

Note 9: This parameter is guaranteed by design but is not tested. The bus switch contributes no propagation delay other than the RC delay of the typical On Resistance of the switch and the 50pF load capacitance, when driven by an ideal voltage source (zero output impedance).

AC Electrical Characteristics: Translating Diode

Symbol	Parameter	T_A = −40 °C to +85 °C, C_L = 50pF, RU = RD = 500Ω		Units	Conditions (S_2 = S_5 = V_{CC})	Figure Number
		V_{CC} = 4.5 – 5.5V				
		Min	Max			
t_{PHL}, t_{PLH}	Propagation Delay Bus-to-Bus (Note 10)		0.25	ns	V_I = OPEN	Figures 2, 3
t_{PZH}, t_{PZL}	Output Enable Time	1.5	10.0	ns	V_I = 7V for t_{PZL} V_I = OPEN for t_{PZH}	Figures 2, 3
t_{PHZ}, t_{PLZ}	Output Disable Time	1.5	9.0	ns	V_I = 7V for t_{PLZ} V_I = OPEN for t_{PHZ}	Figures 2, 3
t_{PZH}, t_{PZL}	S_{el} ($S_{0,1}$) to Output Enable Time	1.5	11.0	ns	V_I = 7V for t_{PZL} V_I = OPEN for t_{PZH}	Figures 2, 3
t_{PHZ}, t_{PLZ}	S_{el} ($S_{0,1}$) to Output Disable Time	1.5	10.0	ns	V_I = 7V for t_{PLZ} V_I = OPEN for t_{PHZ}	Figures 2, 3

Note 10: This parameter is guaranteed by design but is not tested. This bus switch contributes no propagation delay other than the RC delay of the typical On Resistance of the switch and the 50pF load capacitance, when driven by an ideal voltage source (zero output impedance).

Capacitance (Note 11)

Symbol	Parameter	Typ	Max	Units	Conditions
C_{IN}	Control Pin Input Capacitance	4		pF	V_{CC} = 5.0V, V_{IN} = 0V
$C_{I/O}$	Input/Output Capacitance “OFF State”	8		pF	V_{CC}, $\overline{OE}$ = 5.0V, V_{IN} = 0V

Note 11: T_A = +25°C, f = 1 MHz, Capacitance is characterized but not tested.

Undershoot Characteristic (Note 12)

Symbol	Parameter	Min	Typ	Max	Units	Conditions
V_{OUTU}	Output Voltage During Undershoot	2.5	V_{OH} − 0.3		V	$S_2 = S_5 = 0V$, Figure 1
		TBD	TBD		V	$S_2 = S_5 = V_{CC}$

Note 12: This test is intended to characterize the device's protective capabilities by maintaining output signal integrity during an input transient voltage undershoot event.

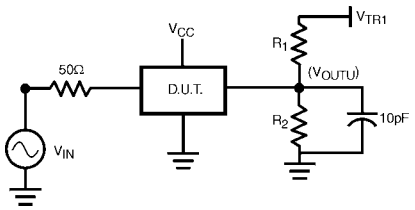

FIGURE 1.

Device Test Conditions

Parameter	Value	Units
V_{IN}	see Waveform	V
$R_1 = R_2$	100K	Ω
V_{TRI}	11.0	V
V_{CC}	5.5	V

Transient Input Voltage (V_{IN}) Waveform

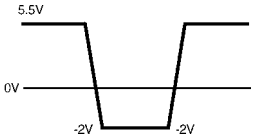

AC Loading and Waveforms

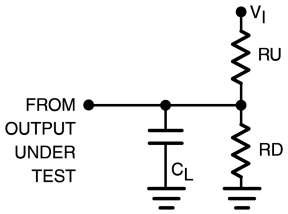

Note: Input driven by 50Ω source terminated in 50Ω

Note: C_L includes load and stray capacitance

Note: Input Frequency = 1.0 MHz, t_W = 500 ns

FIGURE 2. AC Test Circuit

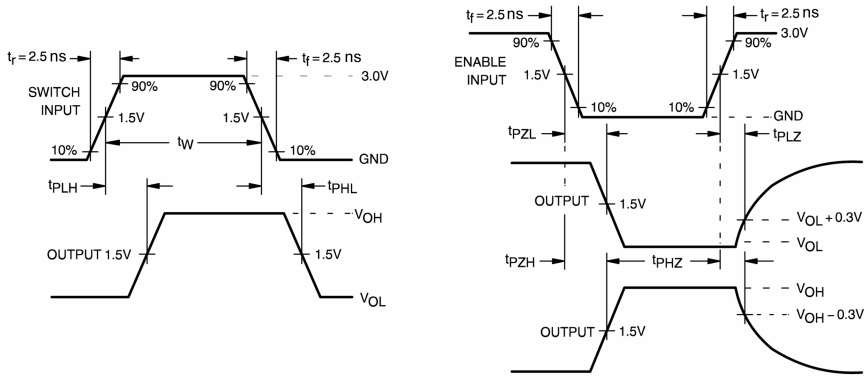

FIGURE 3. AC Waveforms

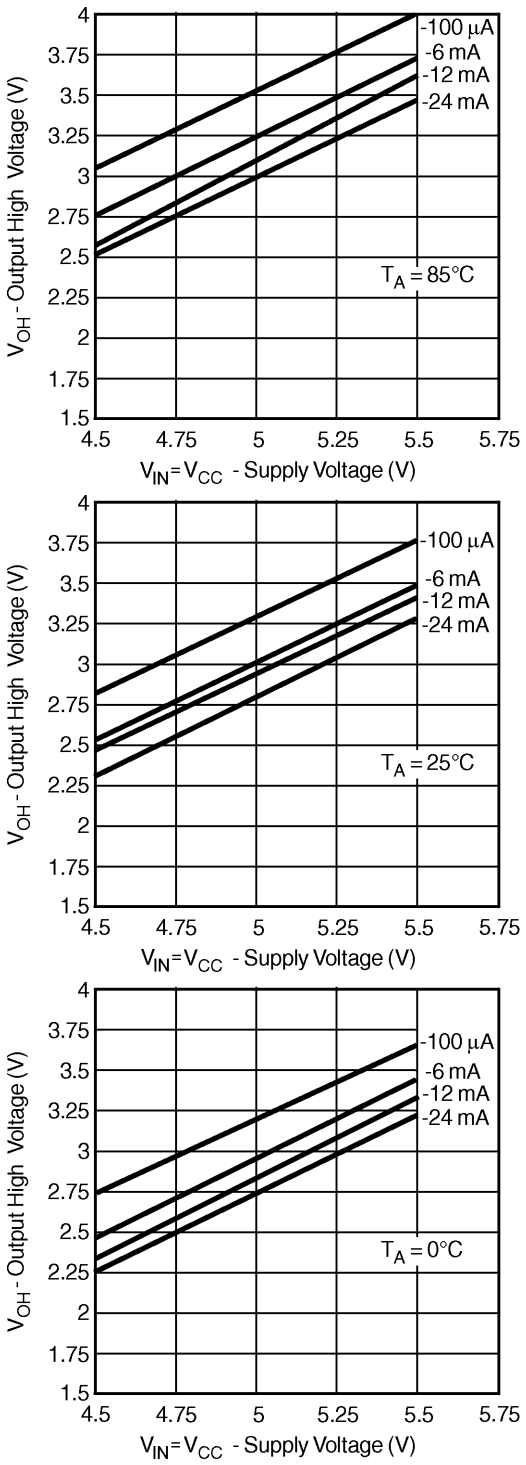
4
3.75
3.5
3.25
3
2.75
2.5
2.25
2
1.75
1.5
4.5
4.75
5
5.25
5.5
5.75
-100 µA
-6 mA
-12 mA
-24 mA
T_A = 85°C
V_{OH} - Output High Voltage (V)
V_{IN}=V_{CC} - Supply Voltage (V)
-100 µA
-6 mA
-12 mA
-24 mA
T_A = 25°C
V_{OH} - Output High Voltage (V)
V_{IN}=V_{CC} - Supply Voltage (V)
-100 µA
-6 mA
-12 mA
-24 mA
T_A = 0°C
V_{OH} - Output High Voltage (V)
V_{IN}=V_{CC} - Supply Voltage (V)

FIGURE 4.

Physical Dimensions inches (millimeters) unless otherwise noted

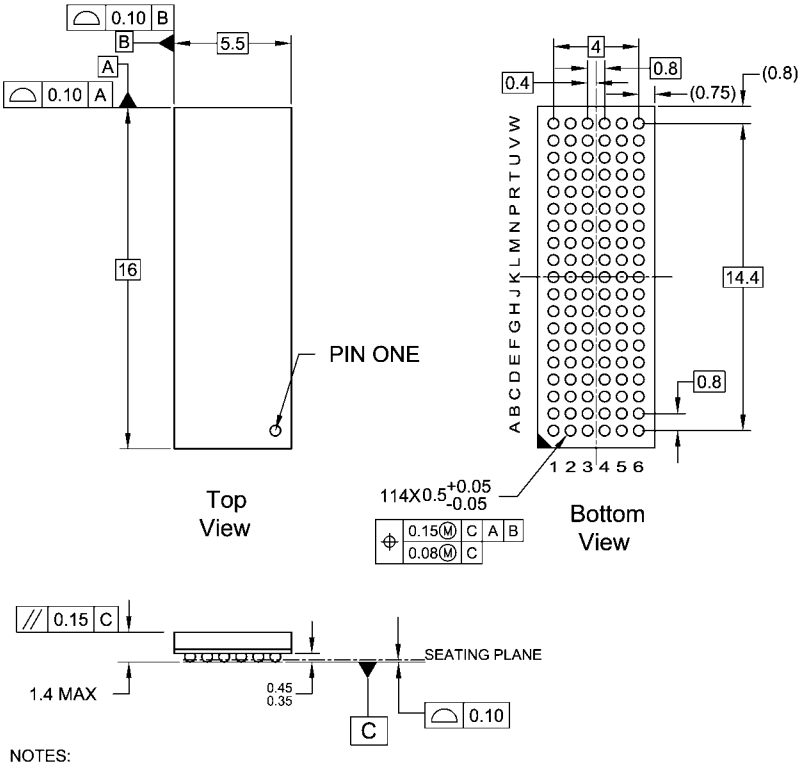

NOTES:
A. THIS PACKAGE CONFORMS TO JEDEC M0-205
B. ALL DIMENSIONS IN MILLIMETERS
C. LAND PATTERN RECOMMENDATION: NSMD (Non Solder Mask Defined)
.35MM DIA PADS WITH A SOLDERMASK OPENING OF .45MM CONCENTRIC TO PADS
D. DRAWING CONFORMS TO ASME Y14.5M-1994

BGA114ArevE

114-Ball Fine-Pitch Ball Grid Array (FBGA), JEDEC MO-205, 5.5mm Wide
Package Number BGA114A

Technology Description

The Fairchild Switch family derives from and embodies Fairchild's proven switch technology used for several years in its 74LVX3L384 (FST3384) bus switch product.

Fairchild does not assume any responsibility for use of any circuitry described, no circuit patent licenses are implied and Fairchild reserves the right at any time without notice to change said circuitry and specifications.

LIFE SUPPORT POLICY

FAIRCHILD'S PRODUCTS ARE NOT AUTHORIZED FOR USE AS CRITICAL COMPONENTS IN LIFE SUPPORT DEVICES OR SYSTEMS WITHOUT THE EXPRESS WRITTEN APPROVAL OF THE PRESIDENT OF FAIRCHILD SEMICONDUCTOR CORPORATION. As used herein:

1. Life support devices or systems are devices or systems which, (a) are intended for surgical implant into the body, or (b) support or sustain life, and (c) whose failure to perform when properly used in accordance with instructions for use provided in the labeling, can be reasonably expected to result in a significant injury to the user.
2. A critical component in any component of a life support device or system whose failure to perform can be reasonably expected to cause the failure of the life support device or system, or to affect its safety or effectiveness.

www.fairchildsemi.com