阅读申明

1.本站收集的数据手册和产品资料都来自互联网，版权归原作者所有。如读者和版权方有任何异议请及时告之，我们将妥善解决。
2.本站提供的中文数据手册是英文数据手册的中文翻译，其目的是协助用户阅读，该译文无法自动跟随原稿更新，同时也可能存在翻译上的不当。建议读者以英文原稿为参考以便获得更精准的信息。
3.本站提供的产品资料，来自厂商的技术支持或者使用者的心得体会等，其内容可能存在描叙上的差异，建议读者做出适当判断。
4.如需与我们联系，请发邮件到marketing@iczoom.com，主题请标有“数据手册”字样。

Read Statement

1. The datasheets and other product information on the site are all from network reference or other public materials, and the copyright belongs to the original author and original published source. If readers and copyright owners have any objections, please contact us and we will deal with it in a timely manner.

2. The Chinese datasheets provided on the website is a Chinese translation of the English datasheets. Its purpose is for reader’s learning exchange only and do not involve commercial purposes. The translation cannot be automatically updated with the original manuscript, and there may also be improper translations. Readers are advised to use the English manuscript as a reference for more accurate information.

3. All product information provided on the website refer to solutions from manufacturers’ technical support or users the contents may have differences in description, and readers are advised to take the original article as the standard.

4. If you have any questions, please contact us at marketing@iczoom.com and mark the subject with “Datasheets”.

Downloaded from www.iczoom.com

Extract from the online catalog

SAC-3P-M12MS/ 3,0-PUR/M12FR

Order No.: 1681570

http://eshop.phoenixcontact.de/phoenix/treeViewClick.do?UID=1681570

Sensor/Actuator cable, 3-position, PUR, halogen-free, Black-gray RAL 7021, Plug, straight M12, A-coded, on Socket, angled M12, A-coded, Cable length: 3 m

Commercial data	
GTIN (EAN)	4 017918 158149
sales group	D110
Pack	1 pcs.
Customs tariff	85444290
Catalog page information	Page 76 (PC-2009)

Product notes

WEEE/RoHS-compliant since: 12/01/2005

http://www.download.phoenixcontact.com Please note that the data given here has been taken from the online catalog. For comprehensive information and data, please refer to the user documentation. The General Terms and Conditions of Use apply to Internet downloads.

Technical data

General data

Rated current at 40°C	4 A
Rated voltage	250 V
Number of positions	3
Volume resistance	≤ 5 mΩ

Insulation resistance	≥ 100 MΩ
Length of cable	3 m
Ambient temperature (operation)	-25 °C ... 90 °C (Male connector / female connector)

General characteristics

Standards/regulations	M12 connector IEC 61076-2-101
Coding	A - standard
Surge voltage category	II
Pollution degree	3
Degree of protection	IP65/IP68/IP69K
Insertion/withdrawal cycles	≥ 100
Contact material	CuSn
Contact surface material	Ni/Au
Contact carrier material	TPU GF
Material of grip body	TPU, hardly inflammable, self-extinguishing
Material, knurls	Zinc die-cast, (nickel-plated)
Sealing material	NBR
Status display	No

Conductor data

Cable type	PUR halogen-free black
Cable type (abbreviation)	PUR
Cable abbreviation	Li9Y11Y
Conductor cross section	0.34 mm²
AWG signal line	22
Conductor structure signal line	42x 0.10 mm
Core diameter including insulation	1.27 mm ±0.02 mm
Thickness, insulation	≥ 0.21 mm (Core insulation)
	≥ 0.76 mm (Outer cable sheath)
External cable diameter	4.40 mm
Wire colors	Brown, blue, black
External sheath, color	Black-gray RAL 7021
Insulation resistance	≥ 100 GΩ*km
Conductor resistance	≤ 58 Ω/m
Nominal voltage, conductor	300 V
Test voltage, conductor	3000 V

Overall twist	3 wires, twisted
Outer sheath, material	PUR
Material conductor insulation	PP
Conductor material	Bare Cu litz wires
Cable weight	26 kg/km
Smallest bending radius, movable installation	44 mm
Number of bending cycles	4000000
Bending radius	44 mm
Traversing path	10 m
Traversing rate	3 m/s
Acceleration	10 m/s²
Ambient temperature (operation)	-40 °C ... 80 °C (cable, fixed installation)
	-5 °C ... 80 °C (cable, flexible installation)
Special properties	Flexible cable conduit capable
	Silicone-free
	Free of substances which would hinder coating with paint or varnish
Flame resistance	in accordance with DIN UL-Style 20549
Halogen-free	in accordance with DIN VDE 0472 part 815
Resistance to oil	in accordance with DIN EN 60811-2-1
Other resistance	Highly resistant to acids, alkaline solutions and solvents
	hydrolysis and microbe resistant

Certificates / Approvals

Certification	CUL Listed, UL Listed

Diagrams/Drawings

Dimensioned drawing

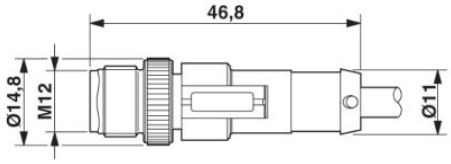

M12 x 1 male connector, straight

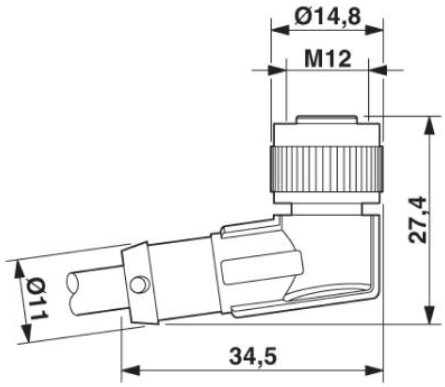

M12 x 1 female connector, angled

Circuit diagram

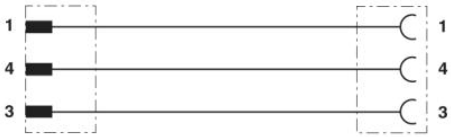

Contact assignment of the M12 plug and the M12 socket

Schematic diagram

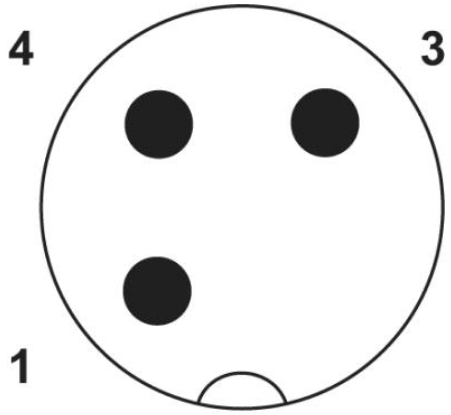

Pin assignment M12 plug, 3-pos., A-coded, view male side

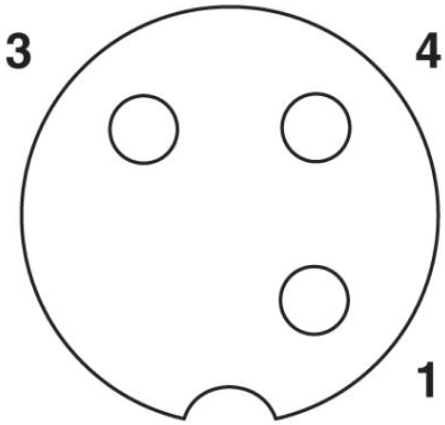

Pin assignment M12 socket, 3-pos., A-coded, view female side

Address

PHOENIX CONTACT Deutschland GmbH
Flachsmarktstr. 8
32825 Blomberg,Germany
Phone +49 5235 3 12000
Fax +49 5235 3 41200
http://www.phoenixcontact.de

© 2011 Phoenix Contact
Technical modifications reserved;