阅读申明

1.本站收集的数据手册和产品资料都来自互联网，版权归原作者所有。如读者和版权方有任何异议请及时告之，我们将妥善解决。
2.本站提供的中文数据手册是英文数据手册的中文翻译，其目的是协助用户阅读，该译文无法自动跟随原稿更新，同时也可能存在翻译上的不当。建议读者以英文原稿为参考以便获得更精准的信息。
3.本站提供的产品资料，来自厂商的技术支持或者使用者的心得体会等，其内容可能存在描叙上的差异，建议读者做出适当判断。
4.如需与我们联系，请发邮件到marketing@iczoom.com，主题请标有“数据手册”字样。

Read Statement

1. The datasheets and other product information on the site are all from network reference or other public materials, and the copyright belongs to the original author and original published source. If readers and copyright owners have any objections, please contact us and we will deal with it in a timely manner.

2. The Chinese datasheets provided on the website is a Chinese translation of the English datasheets. Its purpose is for reader’s learning exchange only and do not involve commercial purposes. The translation cannot be automatically updated with the original manuscript, and there may also be improper translations. Readers are advised to use the English manuscript as a reference for more accurate information.

3. All product information provided on the website refer to solutions from manufacturers’ technical support or users the contents may have differences in description, and readers are advised to take the original article as the standard.

4. If you have any questions, please contact us at marketing@iczoom.com and mark the subject with “Datasheets”.

Downloaded from www.iczoom.com

High Voltage MLC Chips

For 600V to 5000V Applications

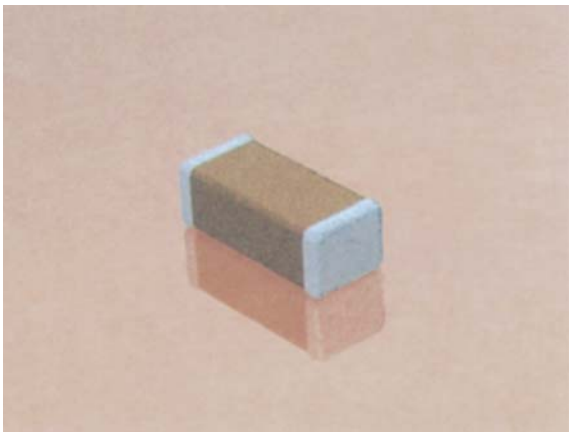

NEW 630V RANGE

High value, low leakage and small size are difficult parameters to obtain in capacitors for high voltage systems. AVX special high voltage MLC chip capacitors meet these performance characteristics and are designed for applications such as snubbers in high frequency power converters, resonators in SMPS, and high voltage coupling/dc blocking. These high voltage chip designs exhibit low ESRs at high frequencies.

Larger physical sizes than normally encountered chips are used to make high voltage MLC chip products. Special precautions must be taken in applying these chips in surface mount assemblies. The temperature gradient during heating or cooling cycles should not exceed 4ºC per second. The preheat temperature must be within 50ºC of the peak temperature reached by the ceramic bodies through the soldering process. Chip sizes 1210 and larger should be reflow soldered only. Capacitors may require protective surface coating to prevent external arcing.

For 1825, 2225 and 3640 sizes, AVX offers leaded version in either thru-hole or SMT configurations (for details see section on high voltage leaded MLC chips).

HOW TO ORDER

1808	A	A	271	K	A	1	1	A
AVX Style	**Voltage**	**Temperature Coefficient**	**Capacitance Code**	**Capacitance Tolerance**	**Test Level**	**Termination***	**Packaging**	**Special Code**
0805	600V/630V = C	C0G = A	(2 significant digits	C0G: J = ±5%	A = Standard	1 = Pd/Ag	1 = 7" Reel**	A = Standard
1206	1000V = A	X7R = C	+ no. of zeros)	K = ±10%		T = Plated	3 = 13" Reel	
1210	1500V = S		Examples:	M = ±20%		Ni and Sn	9 = Bulk	
1808	2000V = G		10 pF = 100	X7R: K = ±10%		(RoHS Compliant)		
1812	2500V = W		100 pF = 101	M = ±20%				
1825	3000V = H		1,000 pF = 102	Z = +80%,				
2220	4000V = J		22,000 pF = 223	-20%				
2225	5000V = K		220,000 pF = 224					
3640 ***			1 µF = 105					

***Note:** Terminations with 5% minimum lead (Pb) is available, see pages 89 and 90 for LD style. Leaded terminations are available, see pages 93 and 94.

Notes: Capacitors with X7R dielectrics are not intended for applications across AC supply mains or AC line filtering with polarity reversal. Contact plant for recommendations. Contact factory for availability of Termination and Tolerance options for Specific Part Numbers.

** The 3640 Style is not available on 7" Reels.
*** AVX offers nonstandard chip sizes. Contact factory for details.

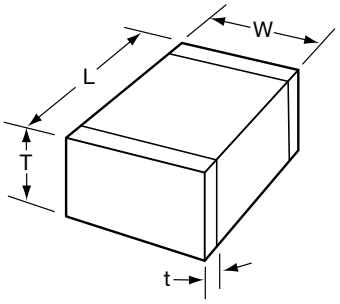

RoHS COMPLIANT

DIMENSIONS

millimeters (inches)

SIZE	0805	1206	1210*	1808*	1812*	1825*	2220*	2225*	3640*
(L) Length	2.01 ± 0.20 (0.079 ± 0.008)	3.20 ± 0.20 (0.126 ± 0.008)	3.20 ± 0.20 (0.126 ± 0.008)	4.57 ± 0.25 (0.180 ± 0.010)	4.50 ± 0.30 (0.177 ± 0.012)	4.50 ± 0.30 (0.177 ± 0.012)	5.70 ± 0.40 (0.224 ± 0.016)	5.72 ± 0.25 (0.225 ± 0.010)	9.14 ± 0.25 (0.360 ± 0.010)
(W) Width	1.25 ± 0.20 (0.049 ±0.008)	1.60 ± 0.20 (0.063 ± 0.008)	2.50 ± 0.20 (0.098 ± 0.008)	2.03 ± 0.25 (0.080 ± 0.010)	3.20 ± 0.20 (0.126 ± 0.008)	6.40 ± 0.30 (0.252 ± 0.012)	5.00 ± 0.40 (0.197 ± 0.016)	6.35 ± 0.25 (0.250 ± 0.010)	10.2 ± 0.25 (0.400 ± 0.010)
(T) Thickness Max.	1.30 (0.051)	1.52 (0.060)	1.70 (0.067)	2.03 (0.080)	2.54 (0.100)	2.54 (0.100)	3.30 (0.130)	2.54 (0.100)	2.54 (0.100)
(t) terminal min.	0.50 ± 0.25 (0.020 ± 0.010)	0.25 (0.010)	0.25 (0.010)	0.25 (0.010)	0.25 (0.010)	0.25 (0.010)	0.25 (0.010)	0.25 (0.010)	0.76 (0.030)
max.		0.75 (0.030)	0.75 (0.030)	1.02 (0.040)	1.02 (0.040)	1.02 (0.040)	1.02 (0.040)	1.02 (0.040)	1.52 (0.060)

*Reflow Soldering Only

High Voltage MLC Chips

For 600V to 5000V Applications

C0G Dielectric

Performance Characteristics

Capacitance Range	10 pF to 0.047 µF (25°C, 1.0 ±0.2 Vrms at 1kHz, for ≤ 1000 pF use 1 MHz)
Capacitance Tolerances	±5%, ±10%, ±20%
Dissipation Factor	0.1% max. (+25°C, 1.0 ±0.2 Vrms, 1kHz, for ≤ 1000 pF use 1 MHz)
Operating Temperature Range	-55°C to +125°C
Temperature Characteristic	0 ±30 ppm/°C (0 VDC)
Voltage Ratings	600, 630, 1000, 1500, 2000, 2500, 3000, 4000 & 5000 VDC (+125°C)
Insulation Resistance (+25°C, at 500 VDC)	100K MΩ min. or 1000 MΩ - µF min., whichever is less
Insulation Resistance (+125°C, at 500 VDC)	10K MΩ min. or 100 MΩ - µF min., whichever is less
Dielectric Strength	Minimum 120% rated voltage for 5 seconds at 50 mA max. current

HIGH VOLTAGE C0G CAPACITANCE VALUES

VOLTAGE		0805	1206	1210	1808	1812	1825	2220	2225	3640
600/630	min.	10pF	10 pF	100 pF	100 pF	100 pF	1000 pF	1000 pF	1000 pF	1000 pF
	max.	330pF	1200 pF	2700 pF	3300 pF	5600 pF	0.012 µF	0.012 µF	0.018 µF	0.047 µF
1000	min.	10pF	10 pF	10 pF	100 pF	100 pF	100 pF	1000 pF	1000 pF	1000 pF
	max.	180pF	560 pF	1500 pF	2200 pF	3300 pF	8200 pF	0.010 µF	0.010 µF	0.022 µF
1500	min.	—	10 pF	10 pF	10 pF	10 pF	100 pF	100 pF	100 pF	100 pF
	max.	—	270 pF	680 pF	820 pF	1800 pF	4700 pF	4700 pF	5600 pF	0.010 µF
2000	min.	—	10 pF	10 pF	10 pF	10 pF	100 pF	100 pF	100 pF	100 pF
	max.	—	120 pF	270 pF	330 pF	1000 pF	1800 pF	2200 pF	2700 pF	6800 pF
2500	min.	—	—	—	10 pF	10 pF	10 pF	100 pF	100 pF	100 pF
	max.	—	—	—	180 pF	470 pF	1200 pF	1500 pF	1800 pF	3900 pF
3000	min.	—	—	—	10 pF	10 pF	10 pF	10 pF	10 pF	100 pF
	max.	—	—	—	120 pF	330 pF	820 pF	1000 pF	1200 pF	2700 pF
4000	min.	—	—	—	10 pF	10 pF	10 pF	10 pF	10 pF	100 pF
	max.	—	—	—	47 pF	150 pF	330 pF	470 pF	560 pF	1200 pF
5000	min.	—	—	—	—	—	—	10 pF	10 pF	10 pF
	max.	—	—	—	—	—	—	220 pF	270 pF	820 pF

X7R Dielectric

Performance Characteristics

Capacitance Range	10 pF to 0.56 µF (25°C, 1.0 ±0.2 Vrms at 1kHz)
Capacitance Tolerances	±10%; ±20%; +80%, -20%
Dissipation Factor	2.5% max. (+25°C, 1.0 ±0.2 Vrms, 1kHz)
Operating Temperature Range	-55°C to +125°C
Temperature Characteristic	±15% (0 VDC)
Voltage Ratings	600, 630, 1000, 1500, 2000, 2500, 3000, 4000 & 5000 VDC (+125°C)
Insulation Resistance (+25°C, at 500 VDC)	100K MΩ min. or 1000 MΩ - µF min., whichever is less
Insulation Resistance (+125°C, at 500 VDC)	10K MΩ min. or 100 MΩ - µF min., whichever is less
Dielectric Strength	Minimum 120% rated voltage for 5 seconds at 50 mA max. current

HIGH VOLTAGE X7R MAXIMUM CAPACITANCE VALUES

VOLTAGE		0805	1206	1210	1808	1812	1825	2220	2225	3640
600/630	min.	100pF	1000 pF	1000 pF	1000 pF	1000 pF	0.010 µF	0.010 µF	0.010 µF	0.010 µF
	max.	6800pF	0.022 µF	0.056 µF	0.068 µF	0.120 µF	0.270 µF	0.270 µF	0.330 µF	0.560 µF
1000	min.	100pF	100 pF	1000 pF	1000 pF	1000 pF	1000 pF	1000 pF	1000 pF	0.010 µF
	max.	1500pF	6800 pF	0.015 µF	0.018 µF	0.039 µF	0.100 µF	0.120 µF	0.150 µF	0.220 µF
1500	min.	—	100 pF	100 pF	100 pF	100 pF	1000 pF	1000 pF	1000 pF	1000 pF
	max.	—	2700 pF	5600 pF	6800 pF	0.015 µF	0.056 µF	0.056 µF	0.068 µF	0.100 µF
2000	min.	—	10 pF	100 pF	100 pF	100 pF	100 pF	1000 pF	1000 pF	1000 pF
	max.	—	1500 pF	3300 pF	3300 pF	8200 pF	0.022 µF	0.027 µF	0.033 µF	0.027 µF
2500	min.	—	—	—	10 pF	10 pF	100 pF	100 pF	100 pF	1000 pF
	max.	—	—	—	2200 pF	5600 pF	0.015 µF	0.018 µF	0.022 µF	0.022 µF
3000	min.	—	—	—	10 pF	10 pF	100 pF	100 pF	100 pF	1000 pF
	max.	—	—	—	1800 pF	3900 pF	0.010 µF	0.012 µF	0.015 µF	0.018 µF
4000	min.	—	—	—	—	—	—	—	—	100 pF
	max.	—	—	—	—	—	—	—	—	6800 pF
5000	min.	—	—	—	—	—	—	—	—	100 pF
	max.	—	—	—	—	—	—	—	—	3300 pF