阅读申明

1.本站收集的数据手册和产品资料都来自互联网，版权归原作者所有。如读者和版权方有任何异议请及时告之，我们将妥善解决。
2.本站提供的中文数据手册是英文数据手册的中文翻译，其目的是协助用户阅读，该译文无法自动跟随原稿更新，同时也可能存在翻译上的不当。建议读者以英文原稿为参考以便获得更精准的信息。
3.本站提供的产品资料，来自厂商的技术支持或者使用者的心得体会等，其内容可能存在描叙上的差异，建议读者做出适当判断。
4.如需与我们联系，请发邮件到marketing@iczoom.com，主题请标有“数据手册”字样。

Read Statement

1. The datasheets and other product information on the site are all from network reference or other public materials, and the copyright belongs to the original author and original published source. If readers and copyright owners have any objections, please contact us and we will deal with it in a timely manner.

2. The Chinese datasheets provided on the website is a Chinese translation of the English datasheets. Its purpose is for reader’s learning exchange only and do not involve commercial purposes. The translation cannot be automatically updated with the original manuscript, and there may also be improper translations. Readers are advised to use the English manuscript as a reference for more accurate information.

3. All product information provided on the website refer to solutions from manufacturers’ technical support or users the contents may have differences in description, and readers are advised to take the original article as the standard.

4. If you have any questions, please contact us at marketing@iczoom.com and mark the subject with “Datasheets”.

Downloaded from www.iczoom.com

⚠Note • Please read rating and ⚠CAUTION (for storage, operating, rating, soldering, mounting and handling) in this catalog to prevent smoking and/or burning, etc.
• This catalog has only typical specifications because there is no space for detailed specifications. Therefore, please review our product specifications or consult the approval sheet for product specifications before ordering.

Radial Lead Type Monolithic Ceramic Capacitors

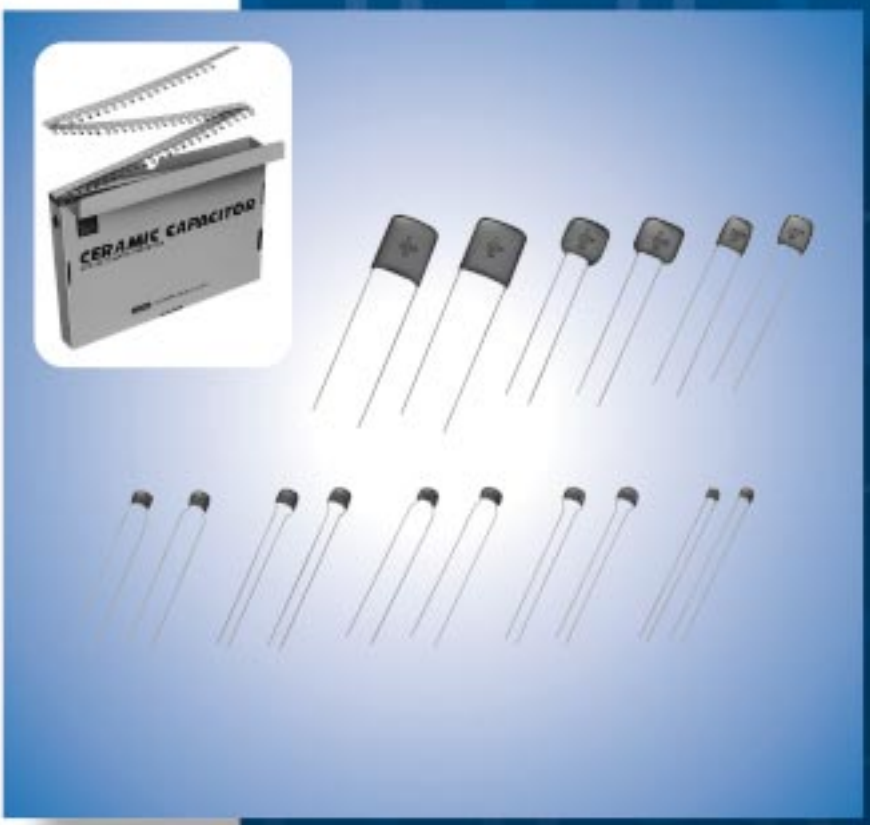

muRata Innovator in Electronics

Murata
Manufacturing Co., Ltd.

Cat.No.C49E-21

EU RoHS Compliant

・All the products in this catalog comply with EU RoHS.
・EU RoHS is "the European Directive 2002/95/EC on the Restriction of the Use of Certain Hazardous Substances in Electrical and Electronic Equipment."
・For more details, please refer to our website 'Murata's Approach for EU RoHS' (http://www.murata.com/info/rohs.html).

CONTENTS

Part Numbering — 2

1 RPE Series (DC25V-DC100V) — 4
- Marking — 5
- Temperature Compensating Type, C0G Characteristics — 6
- High Dielectric Constant Type, X7R Characteristics — 9
- High Dielectric Constant Type, Y5V Characteristics — 10
- Specifications and Test Methods — 12

2 RPE Series Small Size, Large Capacitance (DC50V) — 15
- Marking — 16
- High Dielectric Constant Type, X7R Characteristics — 16
- Specifications and Test Methods — 17

3 RH Series 150°C max. (for Automotive) (DC50V-DC100V) — 19
- Marking — 20
- Temperature Compensating Type, X8G Characteristics — 20
- High Dielectric Constant Type, X8L Characteristics — 21
- Specifications and Test Methods — 24

4 RDE Series (For Commercial Use Only) (DC25V-DC630V) — 27
- Marking — 28
- Temperature Compensating Type, C0G Characteristics — 28
- High Dielectric Constant Type, X7R/X7S Characteristics — 30
- High Dielectric Constant Type, F/Y5V Characteristics — 33
- Specifications and Test Methods — 34

5 RDE Series Large Capacitance and High Allowable Ripple Current (For Commercial Use Only) (DC250V-DC630V) — 37
- Marking — 38
- High Dielectric Constant Type, X7T Characteristics — 38
- Specifications and Test Methods — 40

Reference Data (Typical Example) — 42
- RPE Series — 42
- RPE Series Small Size, Large Capacitance — 43
- RH Series — 44
- RDE Series — 45

Packaging — 46

⚠Caution — 48

Notice — 51

● Part Numbering

Radial Lead Type Monolithic Ceramic Capacitors

(Part Number) **RP** **E** **R7** **1H** **104** **K** **2** **M1** **A03** **A**
❶ ❷ ❸ ❹ ❺ ❻ ❼ ❽ ❾ ❿

❶Product ID

❷Series/Terminal

Product ID	Series/Terminal	
RP	**E**	Radial Lead Type Monolithic Ceramic Capacitors (DC25V-DC100V)
RH	**E/D**	Radial Lead Type Monolithic Ceramic Capacitors 150°C max. (for Automotive) (DC50V-DC100V)
RD	**E**	Radial Lead Type Monolithic Ceramic Capacitors (For Commercial Use Only) (DC25V-DC630V)

❸Temperature Characteristics

Code	Temperature Characteristics	Reference Temperature	Temperature Range	Capacitance Change or Temperature Coefficient	Operating Temperature Range
5C	C0G*	25°C	25 to 125°C	0±30ppm/°C	-55 to 125°C
5G	X8G*	25°C	25 to 150°C	0±30ppm/°C	-55 to 150°C
C7	X7S	25°C	-55 to 125°C	±22%	-55 to 125°C
D7	X7T	25°C	-55 to 125°C	+22, -33%	-55 to 125°C
F1	F	20°C	-25 to 85°C	+30, -80%	-25 to 85°C
F5	Y5V	25°C	-30 to 85°C	+22, -82%	-30 to 85°C
L8	X8L	25°C	-55 to 125°C	±15%	-55 to 150°C
			125 to 150°C	+15, -40%	
R7	X7R	25°C	-55 to 125°C	±15%	-55 to 125°C

* Please refer to table for Capacitance change under reference temperature.

• Capacitance change from each temperature

Char.	Nominal Values (ppm/˚C) *1	Capacitance Change from 25˚C (%)					
		-55˚C		-30˚C		-10˚C	
		Max.	Min.	Max.	Min.	Max.	Min.
C0G	0±30	0.58	-0.24	0.40	-0.17	0.25	-0.11
X8G							

*1: Nominal values denote the temperature coefficient within a range of 25 to 125˚C.

❹Rated Voltage

Code	Rated Voltage
1E	DC25V
1H	DC50V
2A	DC100V
2E	DC250V
2W	DC450V
2J	DC630V

❺Capacitance

Expressed by three-digit alphanumerics. The unit is pico-farad (pF). The first and second figures are significant digits, and the third figure expresses the number of zeros that follow the two numbers.
If there is a decimal point, it is expressed by the capital letter "**R**."
In this case, all figures are significant digits.

❻Capacitance Tolerance

Code	Capacitance Tolerance	Temperature Characteristics	Capacitance Step
C	±0.25pF	C0G	≦5pF : 1pF Step
D	±0.5pF		6 to 9pF : 1pF Step
J	±5%	C0G/X8G	≧10 : E12 Series
K	±10%	X7S/X7T/X7R/X8L	E6 Series
M	±20%	X7S/X7T/X7R/X8L	E3 Series
Z	+80%, -20%	F/Y5V	E3 Series

Continued on the following page. ↗

Continued from the preceding page.

❼Dimensions (LxW)

Code	Dimensions (LxW)
0	4.0×3.5mm or 5.0×3.5mm (Depends on Part Number List)
1	4.0×3.5mm or 4.5×3.5mm or 5.0×3.5mm (Depends on Part Number List)
2	5.0×3.5mm or 5.5×4.0mm or 5.7×4.5mm (Depends on Part Number List)
3	5.0×4.5mm or 5.5×5.0mm or 6.0×5.5mm (Depends on Part Number List)
5	7.5×7.5mm*
6	10.0×10.0mm
7	12.5×12.5mm
8	7.5×5.5mm
U	7.7×12.5mm*
W	5.5×7.5mm

* DC630V: W+0.5mm

❽Lead Style

Code	Lead Style	Lead Spacing
A2	Straight Long	2.5mm
B1	Straight Long	5.0mm
C1	Straight Long	10.0mm
DB	Straight Taping	2.5mm
E1/E2	Straight Taping	5.0mm
K1	Inside Crimp	5.0mm
M1/M2	Inside Crimp Taping	5.0mm
P1	Outside Crimp	2.5mm
S1/S2	Outside Crimp Taping	2.5mm

Lead distance between reference and bottom planes.
M1, S1: H_0 = 16.0±0.5mm
M2, S2: H_0 = 20.0±0.5mm
E1: H = 17.5±0.5mm
E2: H = 20.0±0.5mm

❾Individual Specification Code

Expressed by three-digit alphanumerics

❿Packaging

Code	Packaging
A	Ammo Pack
B	Bulk

Radial Lead Type Monolithic Ceramic Capacitors

RPE Series (DC25V-DC100V)

■ Features

1. The RPE series capacitors have small dimensions, large capacitance, and a capacity volume ratio of 10 micro F/cm cubed, close to that of electrolytic capacitors. They do not have polarity.
2. Excellent frequency characteristics and due to their small internal inductance are suitable for high frequencies.
3. Not coated with wax so there is no change in their exterior appearance due to the outflow of wax during soldering or solvent during cleansing.
4. They are highly nonflammable, having characteristics equivalent to the UL94V-0 standard.

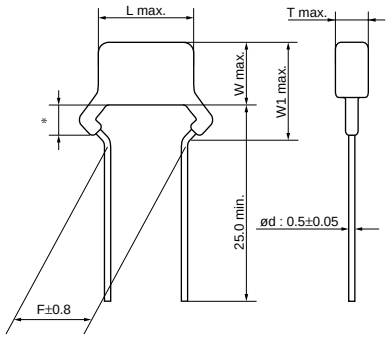

Dimensions code: 2/3
Lead style code: P1

∗ Coating extension does not exceed the end of the lead bend.
· Lead Wire : Solder Coated Copper Wire or Solder Coated CP Wire

(in mm)

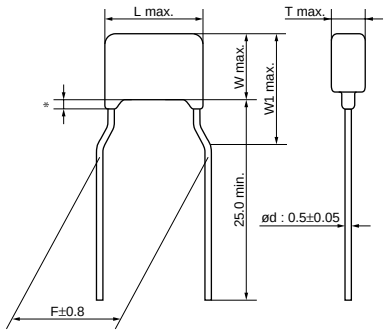

Dimensions code: 2/3/8
Lead style code: K1

∗ Coating extension does not exceed the end of the lead bend.
· Lead Wire : Solder Coated Copper Wire or Solder Coated CP Wire

(in mm)

■ Dimensions

Dimensions and Lead Style Code	Dimensions (mm)					
	L	W	W1	T	F	d
2P1/2S1/2S2	5.0	3.5	5.0	See the individual product specifications	2.5	0.5
2K1/2M1/2M2	5.0	3.5	5.0		5.0	0.5
3P1/3S1/3S2	5.0	4.5	6.3		2.5	0.5
3K1/3M1/3M2	5.0	4.5	6.3		5.0	0.5
5B1/5E1/5E2	7.5	7.5	-		5.0	0.5
6B1/6E1/6E2	10.0	10.0	-		5.0	0.5
7C1	12.5	12.5	-		10.0	0.5
8K1/8M1/8M2	7.5	5.5	8.0		5.0	0.5

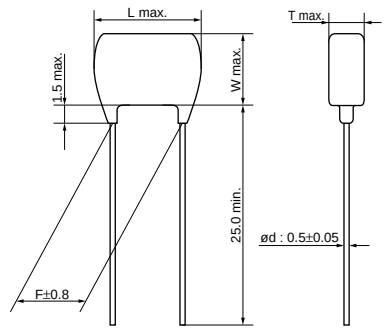

Dimensions code: 5/6/7
Lead style code: B1/C1

· Lead Wire : Solder Coated Copper Wire or Solder Coated CP Wire

(in mm)

Continued on the following page.

Continued from the preceding page.

■ Marking

Dimensions Code \ Type		Temperature Compensating Type	High Dielectric Constant Type	
	Temp. Char.	C0G	X7R	Y5V
2	Individual Specification Code A□□ B□□ Z□□	102J 5A Marked on both sides	222K	224Z
	Individual Specification Code Except A□□ B□□ Z□□	Ⓜ 682 J5A	Ⓜ 224 K5C	Ⓜ 474 Z5F
3, 8		—	Ⓜ684 K5C	—
5, 6, 7		—	Ⓜ 225 K5C	—
Temperature Characteristics		Marked with code (C0G char.: A, X7R char.: C, Y5V char.: F) A part is omitted (Please refer to the marking example.)		
Nominal Capacitance		Under 100pF: Actual value 100pF and over: marked with 3 figures		
Capacitance Tolerance		Marked with code		
Rated Voltage		Marked with code (DC25V: 2, DC50V: 5, DC100V: 1) A part is omitted (Please refer to the marking example.)		
Manufacturer's Identification		Marked with Ⓜ A part is omitted (Please refer to the marking example.)		

Temperature Compensating Type, C0G Characteristics

Part Number	Temp. Char.	Rated Voltage (Vdc)	Capacitance (pF)	Dimensions LxW (mm)	Dimension T (mm)	Lead Space F (mm)	Lead Style Code Bulk	Lead Style Code Taping (1)	Lead Style Code Taping (2)
RPE5C1H1R0C2□□B03□	C0G	50	1.0 ±0.25pF	5.0 x 3.5	2.5	2.5	P1	S1	S2
RPE5C1H1R0C2□□B03□	C0G	50	1.0 ±0.25pF	5.0 x 3.5	2.5	5.0	K1	M1	M2
RPE5C1H2R0C2□□B03□	C0G	50	2.0 ±0.25pF	5.0 x 3.5	2.5	2.5	P1	S1	S2
RPE5C1H2R0C2□□B03□	C0G	50	2.0 ±0.25pF	5.0 x 3.5	2.5	5.0	K1	M1	M2
RPE5C1H3R0C2□□B03□	C0G	50	3.0 ±0.25pF	5.0 x 3.5	2.5	2.5	P1	S1	S2
RPE5C1H3R0C2□□B03□	C0G	50	3.0 ±0.25pF	5.0 x 3.5	2.5	5.0	K1	M1	M2
RPE5C1H4R0C2□□B03□	C0G	50	4.0 ±0.25pF	5.0 x 3.5	2.5	2.5	P1	S1	S2
RPE5C1H4R0C2□□B03□	C0G	50	4.0 ±0.25pF	5.0 x 3.5	2.5	5.0	K1	M1	M2
RPE5C1H5R0C2□□B03□	C0G	50	5.0 ±0.25pF	5.0 x 3.5	2.5	2.5	P1	S1	S2
RPE5C1H5R0C2□□B03□	C0G	50	5.0 ±0.25pF	5.0 x 3.5	2.5	5.0	K1	M1	M2
RPE5C1H6R0D2□□B03□	C0G	50	6.0 ±0.5pF	5.0 x 3.5	2.5	2.5	P1	S1	S2
RPE5C1H6R0D2□□B03□	C0G	50	6.0 ±0.5pF	5.0 x 3.5	2.5	5.0	K1	M1	M2
RPE5C1H7R0D2□□Z03□	C0G	50	7.0 ±0.5pF	5.0 x 3.5	2.5	2.5	P1	S1	S2
RPE5C1H7R0D2□□Z03□	C0G	50	7.0 ±0.5pF	5.0 x 3.5	2.5	5.0	K1	M1	M2
RPE5C1H8R0D2□□Z03□	C0G	50	8.0 ±0.5pF	5.0 x 3.5	2.5	2.5	P1	S1	S2
RPE5C1H8R0D2□□Z03□	C0G	50	8.0 ±0.5pF	5.0 x 3.5	2.5	5.0	K1	M1	M2
RPE5C1H9R0D2□□Z03□	C0G	50	9.0 ±0.5pF	5.0 x 3.5	2.5	2.5	P1	S1	S2
RPE5C1H9R0D2□□Z03□	C0G	50	9.0 ±0.5pF	5.0 x 3.5	2.5	5.0	K1	M1	M2
RPE5C1H100J2□□Z03□	C0G	50	10 ±5%	5.0 x 3.5	2.5	2.5	P1	S1	S2
RPE5C1H100J2□□Z03□	C0G	50	10 ±5%	5.0 x 3.5	2.5	5.0	K1	M1	M2
RPE5C1H120J2□□Z03□	C0G	50	12 ±5%	5.0 x 3.5	2.5	2.5	P1	S1	S2
RPE5C1H120J2□□Z03□	C0G	50	12 ±5%	5.0 x 3.5	2.5	5.0	K1	M1	M2
RPE5C1H150J2□□Z03□	C0G	50	15 ±5%	5.0 x 3.5	2.5	2.5	P1	S1	S2
RPE5C1H150J2□□Z03□	C0G	50	15 ±5%	5.0 x 3.5	2.5	5.0	K1	M1	M2
RPE5C1H180J2□□Z03□	C0G	50	18 ±5%	5.0 x 3.5	2.5	2.5	P1	S1	S2
RPE5C1H180J2□□Z03□	C0G	50	18 ±5%	5.0 x 3.5	2.5	5.0	K1	M1	M2
RPE5C1H220J2□□Z03□	C0G	50	22 ±5%	5.0 x 3.5	2.5	2.5	P1	S1	S2
RPE5C1H220J2□□Z03□	C0G	50	22 ±5%	5.0 x 3.5	2.5	5.0	K1	M1	M2
RPE5C1H270J2□□Z03□	C0G	50	27 ±5%	5.0 x 3.5	2.5	2.5	P1	S1	S2
RPE5C1H270J2□□Z03□	C0G	50	27 ±5%	5.0 x 3.5	2.5	5.0	K1	M1	M2
RPE5C1H330J2□□Z03□	C0G	50	33 ±5%	5.0 x 3.5	2.5	2.5	P1	S1	S2
RPE5C1H330J2□□Z03□	C0G	50	33 ±5%	5.0 x 3.5	2.5	5.0	K1	M1	M2
RPE5C1H390J2□□Z03□	C0G	50	39 ±5%	5.0 x 3.5	2.5	2.5	P1	S1	S2
RPE5C1H390J2□□Z03□	C0G	50	39 ±5%	5.0 x 3.5	2.5	5.0	K1	M1	M2
RPE5C1H470J2□□Z03□	C0G	50	47 ±5%	5.0 x 3.5	2.5	2.5	P1	S1	S2
RPE5C1H470J2□□Z03□	C0G	50	47 ±5%	5.0 x 3.5	2.5	5.0	K1	M1	M2
RPE5C1H560J2□□Z03□	C0G	50	56 ±5%	5.0 x 3.5	2.5	2.5	P1	S1	S2
RPE5C1H560J2□□Z03□	C0G	50	56 ±5%	5.0 x 3.5	2.5	5.0	K1	M1	M2
RPE5C1H680J2□□Z03□	C0G	50	68 ±5%	5.0 x 3.5	2.5	2.5	P1	S1	S2
RPE5C1H680J2□□Z03□	C0G	50	68 ±5%	5.0 x 3.5	2.5	5.0	K1	M1	M2
RPE5C1H820J2□□Z03□	C0G	50	82 ±5%	5.0 x 3.5	2.5	2.5	P1	S1	S2
RPE5C1H820J2□□Z03□	C0G	50	82 ±5%	5.0 x 3.5	2.5	5.0	K1	M1	M2
RPE5C1H101J2□□A03□	C0G	50	100 ±5%	5.0 x 3.5	2.5	2.5	P1	S1	S2
RPE5C1H101J2□□A03□	C0G	50	100 ±5%	5.0 x 3.5	2.5	5.0	K1	M1	M2
RPE5C1H121J2□□A03□	C0G	50	120 ±5%	5.0 x 3.5	2.5	2.5	P1	S1	S2
RPE5C1H121J2□□A03□	C0G	50	120 ±5%	5.0 x 3.5	2.5	5.0	K1	M1	M2
RPE5C1H151J2□□A03□	C0G	50	150 ±5%	5.0 x 3.5	2.5	2.5	P1	S1	S2
RPE5C1H151J2□□A03□	C0G	50	150 ±5%	5.0 x 3.5	2.5	5.0	K1	M1	M2
RPE5C1H181J2□□A03□	C0G	50	180 ±5%	5.0 x 3.5	2.5	2.5	P1	S1	S2
RPE5C1H181J2□□A03□	C0G	50	180 ±5%	5.0 x 3.5	2.5	5.0	K1	M1	M2
RPE5C1H221J2□□A03□	C0G	50	220 ±5%	5.0 x 3.5	2.5	2.5	P1	S1	S2
RPE5C1H221J2□□A03□	C0G	50	220 ±5%	5.0 x 3.5	2.5	5.0	K1	M1	M2
RPE5C1H271J2□□A03□	C0G	50	270 ±5%	5.0 x 3.5	2.5	2.5	P1	S1	S2
RPE5C1H271J2□□A03□	C0G	50	270 ±5%	5.0 x 3.5	2.5	5.0	K1	M1	M2

Continued on the following page.

Continued from the preceding page.

Part Number	Temp. Char.	Rated Voltage (Vdc)	Capacitance (pF)	Dimensions LxW (mm)	Dimension T (mm)	Lead Space F (mm)	Lead Style Code Bulk	Lead Style Code Taping (1)	Lead Style Code Taping (2)
RPE5C1H331J2□□A03□	C0G	50	330 ±5%	5.0 x 3.5	2.5	2.5	P1	S1	S2
RPE5C1H331J2□□A03□	C0G	50	330 ±5%	5.0 x 3.5	2.5	5.0	K1	M1	M2
RPE5C1H391J2□□A03□	C0G	50	390 ±5%	5.0 x 3.5	2.5	2.5	P1	S1	S2
RPE5C1H391J2□□A03□	C0G	50	390 ±5%	5.0 x 3.5	2.5	5.0	K1	M1	M2
RPE5C1H471J2□□A03□	C0G	50	470 ±5%	5.0 x 3.5	2.5	2.5	P1	S1	S2
RPE5C1H471J2□□A03□	C0G	50	470 ±5%	5.0 x 3.5	2.5	5.0	K1	M1	M2
RPE5C1H561J2□□A03□	C0G	50	560 ±5%	5.0 x 3.5	2.5	2.5	P1	S1	S2
RPE5C1H561J2□□A03□	C0G	50	560 ±5%	5.0 x 3.5	2.5	5.0	K1	M1	M2
RPE5C1H681J2□□A03□	C0G	50	680 ±5%	5.0 x 3.5	2.5	2.5	P1	S1	S2
RPE5C1H681J2□□A03□	C0G	50	680 ±5%	5.0 x 3.5	2.5	5.0	K1	M1	M2
RPE5C1H821J2□□A03□	C0G	50	820 ±5%	5.0 x 3.5	2.5	2.5	P1	S1	S2
RPE5C1H821J2□□A03□	C0G	50	820 ±5%	5.0 x 3.5	2.5	5.0	K1	M1	M2
RPE5C1H102J2□□A03□	C0G	50	1000 ±5%	5.0 x 3.5	2.5	2.5	P1	S1	S2
RPE5C1H102J2□□A03□	C0G	50	1000 ±5%	5.0 x 3.5	2.5	5.0	K1	M1	M2
RPE5C1H122J2□□A03□	C0G	50	1200 ±5%	5.0 x 3.5	3.15	2.5	P1	S1	S2
RPE5C1H122J2□□A03□	C0G	50	1200 ±5%	5.0 x 3.5	3.15	5.0	K1	M1	M2
RPE5C1H152J2□□A03□	C0G	50	1500 ±5%	5.0 x 3.5	3.15	2.5	P1	S1	S2
RPE5C1H152J2□□A03□	C0G	50	1500 ±5%	5.0 x 3.5	3.15	5.0	K1	M1	M2
RPE5C1H182J2□□C03□	C0G	50	1800 ±5%	5.0 x 3.5	3.15	2.5	P1	S1	S2
RPE5C1H182J2□□A03□	C0G	50	1800 ±5%	5.0 x 3.5	3.15	5.0	K1	M1	M2
RPE5C1H222J2□□C03□	C0G	50	2200 ±5%	5.0 x 3.5	3.15	2.5	P1	S1	S2
RPE5C1H222J2□□A03□	C0G	50	2200 ±5%	5.0 x 3.5	3.15	5.0	K1	M1	M2
RPE5C1H272J2□□C03□	C0G	50	2700 ±5%	5.0 x 3.5	3.15	2.5	P1	S1	S2
RPE5C1H272J2□□A03□	C0G	50	2700 ±5%	5.0 x 3.5	3.15	5.0	K1	M1	M2
RPE5C1H332J2□□C03□	C0G	50	3300 ±5%	5.0 x 3.5	3.15	2.5	P1	S1	S2
RPE5C1H332J2□□A03□	C0G	50	3300 ±5%	5.0 x 3.5	3.15	5.0	K1	M1	M2
RPE5C1H392J2□□C03□	C0G	50	3900 ±5%	5.0 x 3.5	3.15	2.5	P1	S1	S2
RPE5C1H392J2□□A03□	C0G	50	3900 ±5%	5.0 x 3.5	3.15	5.0	K1	M1	M2
RPE5C1H472J2□□C03□	C0G	50	4700 ±5%	5.0 x 3.5	3.15	2.5	P1	S1	S2
RPE5C1H472J2□□A03□	C0G	50	4700 ±5%	5.0 x 3.5	3.15	5.0	K1	M1	M2
RPE5C1H562J2□□C03□	C0G	50	5600 ±5%	5.0 x 3.5	3.15	2.5	P1	S1	S2
RPE5C1H562J2□□A03□	C0G	50	5600 ±5%	5.0 x 3.5	3.15	5.0	K1	M1	M2
RPE5C1H682J2□□C03□	C0G	50	6800 ±5%	5.0 x 3.5	3.15	5.0	K1	M1	M2
RPE5C1H822J2□□C03□	C0G	50	8200 ±5%	5.0 x 3.5	3.15	5.0	K1	M1	M2
RPE5C1H103J2□□C03□	C0G	50	10000 ±5%	5.0 x 3.5	3.15	5.0	K1	M1	M2
RPE5C2A1R0C2□□B03□	C0G	100	1.0 ±0.25pF	5.0 x 3.5	2.5	2.5	P1	S1	S2
RPE5C2A1R0C2□□B03□	C0G	100	1.0 ±0.25pF	5.0 x 3.5	2.5	5.0	K1	M1	M2
RPE5C2A2R0C2□□B03□	C0G	100	2.0 ±0.25pF	5.0 x 3.5	2.5	2.5	P1	S1	S2
RPE5C2A2R0C2□□B03□	C0G	100	2.0 ±0.25pF	5.0 x 3.5	2.5	5.0	K1	M1	M2
RPE5C2A3R0C2□□B03□	C0G	100	3.0 ±0.25pF	5.0 x 3.5	2.5	2.5	P1	S1	S2
RPE5C2A3R0C2□□B03□	C0G	100	3.0 ±0.25pF	5.0 x 3.5	2.5	5.0	K1	M1	M2
RPE5C2A4R0C2□□B03□	C0G	100	4.0 ±0.25pF	5.0 x 3.5	2.5	2.5	P1	S1	S2
RPE5C2A4R0C2□□B03□	C0G	100	4.0 ±0.25pF	5.0 x 3.5	2.5	5.0	K1	M1	M2
RPE5C2A5R0C2□□B03□	C0G	100	5.0 ±0.25pF	5.0 x 3.5	2.5	2.5	P1	S1	S2
RPE5C2A5R0C2□□B03□	C0G	100	5.0 ±0.25pF	5.0 x 3.5	2.5	5.0	K1	M1	M2
RPE5C2A6R0D2□□B03□	C0G	100	6.0 ±0.5pF	5.0 x 3.5	2.5	2.5	P1	S1	S2
RPE5C2A6R0D2□□B03□	C0G	100	6.0 ±0.5pF	5.0 x 3.5	2.5	5.0	K1	M1	M2
RPE5C2A7R0D2□□Z03□	C0G	100	7.0 ±0.5pF	5.0 x 3.5	2.5	2.5	P1	S1	S2
RPE5C2A7R0D2□□Z03□	C0G	100	7.0 ±0.5pF	5.0 x 3.5	2.5	5.0	K1	M1	M2
RPE5C2A8R0D2□□Z03□	C0G	100	8.0 ±0.5pF	5.0 x 3.5	2.5	2.5	P1	S1	S2
RPE5C2A8R0D2□□Z03□	C0G	100	8.0 ±0.5pF	5.0 x 3.5	2.5	5.0	K1	M1	M2
RPE5C2A9R0D2□□Z03□	C0G	100	9.0 ±0.5pF	5.0 x 3.5	2.5	2.5	P1	S1	S2
RPE5C2A9R0D2□□Z03□	C0G	100	9.0 ±0.5pF	5.0 x 3.5	2.5	5.0	K1	M1	M2
RPE5C2A100J2□□Z03□	C0G	100	10 ±5%	5.0 x 3.5	2.5	2.5	P1	S1	S2
RPE5C2A100J2□□Z03□	C0G	100	10 ±5%	5.0 x 3.5	2.5	5.0	K1	M1	M2
RPE5C2A120J2□□Z03□	C0G	100	12 ±5%	5.0 x 3.5	2.5	2.5	P1	S1	S2
RPE5C2A120J2□□Z03□	C0G	100	12 ±5%	5.0 x 3.5	2.5	5.0	K1	M1	M2

Continued on the following page.

Continued from the preceding page.

Part Number	Temp. Char.	Rated Voltage (Vdc)	Capacitance (pF)	Dimensions LxW (mm)	Dimension T (mm)	Lead Space F (mm)	Lead Style Code Bulk	Lead Style Code Taping (1)	Lead Style Code Taping (2)
RPE5C2A150J2□□Z03□	C0G	100	15 ±5%	5.0 x 3.5	2.5	2.5	P1	S1	S2
RPE5C2A150J2□□Z03□	C0G	100	15 ±5%	5.0 x 3.5	2.5	5.0	K1	M1	M2
RPE5C2A180J2□□Z03□	C0G	100	18 ±5%	5.0 x 3.5	2.5	2.5	P1	S1	S2
RPE5C2A180J2□□Z03□	C0G	100	18 ±5%	5.0 x 3.5	2.5	5.0	K1	M1	M2
RPE5C2A220J2□□Z03□	C0G	100	22 ±5%	5.0 x 3.5	2.5	2.5	P1	S1	S2
RPE5C2A220J2□□Z03□	C0G	100	22 ±5%	5.0 x 3.5	2.5	5.0	K1	M1	M2
RPE5C2A270J2□□Z03□	C0G	100	27 ±5%	5.0 x 3.5	2.5	2.5	P1	S1	S2
RPE5C2A270J2□□Z03□	C0G	100	27 ±5%	5.0 x 3.5	2.5	5.0	K1	M1	M2
RPE5C2A330J2□□Z03□	C0G	100	33 ±5%	5.0 x 3.5	2.5	2.5	P1	S1	S2
RPE5C2A330J2□□Z03□	C0G	100	33 ±5%	5.0 x 3.5	2.5	5.0	K1	M1	M2
RPE5C2A390J2□□Z03□	C0G	100	39 ±5%	5.0 x 3.5	2.5	2.5	P1	S1	S2
RPE5C2A390J2□□Z03□	C0G	100	39 ±5%	5.0 x 3.5	2.5	5.0	K1	M1	M2
RPE5C2A470J2□□Z03□	C0G	100	47 ±5%	5.0 x 3.5	2.5	2.5	P1	S1	S2
RPE5C2A470J2□□Z03□	C0G	100	47 ±5%	5.0 x 3.5	2.5	5.0	K1	M1	M2
RPE5C2A560J2□□Z03□	C0G	100	56 ±5%	5.0 x 3.5	2.5	2.5	P1	S1	S2
RPE5C2A560J2□□Z03□	C0G	100	56 ±5%	5.0 x 3.5	2.5	5.0	K1	M1	M2
RPE5C2A680J2□□Z03□	C0G	100	68 ±5%	5.0 x 3.5	2.5	2.5	P1	S1	S2
RPE5C2A680J2□□Z03□	C0G	100	68 ±5%	5.0 x 3.5	2.5	5.0	K1	M1	M2
RPE5C2A820J2□□Z03□	C0G	100	82 ±5%	5.0 x 3.5	2.5	2.5	P1	S1	S2
RPE5C2A820J2□□Z03□	C0G	100	82 ±5%	5.0 x 3.5	2.5	5.0	K1	M1	M2
RPE5C2A101J2□□A03□	C0G	100	100 ±5%	5.0 x 3.5	2.5	2.5	P1	S1	S2
RPE5C2A101J2□□A03□	C0G	100	100 ±5%	5.0 x 3.5	2.5	5.0	K1	M1	M2
RPE5C2A121J2□□A03□	C0G	100	120 ±5%	5.0 x 3.5	2.5	2.5	P1	S1	S2
RPE5C2A121J2□□A03□	C0G	100	120 ±5%	5.0 x 3.5	2.5	5.0	K1	M1	M2
RPE5C2A151J2□□A03□	C0G	100	150 ±5%	5.0 x 3.5	2.5	2.5	P1	S1	S2
RPE5C2A151J2□□A03□	C0G	100	150 ±5%	5.0 x 3.5	2.5	5.0	K1	M1	M2
RPE5C2A181J2□□A03□	C0G	100	180 ±5%	5.0 x 3.5	2.5	2.5	P1	S1	S2
RPE5C2A181J2□□A03□	C0G	100	180 ±5%	5.0 x 3.5	2.5	5.0	K1	M1	M2
RPE5C2A221J2□□A03□	C0G	100	220 ±5%	5.0 x 3.5	2.5	2.5	P1	S1	S2
RPE5C2A221J2□□A03□	C0G	100	220 ±5%	5.0 x 3.5	2.5	5.0	K1	M1	M2
RPE5C2A271J2□□A03□	C0G	100	270 ±5%	5.0 x 3.5	2.5	2.5	P1	S1	S2
RPE5C2A271J2□□A03□	C0G	100	270 ±5%	5.0 x 3.5	2.5	5.0	K1	M1	M2
RPE5C2A331J2□□A03□	C0G	100	330 ±5%	5.0 x 3.5	2.5	2.5	P1	S1	S2
RPE5C2A331J2□□A03□	C0G	100	330 ±5%	5.0 x 3.5	2.5	5.0	K1	M1	M2
RPE5C2A391J2□□A03□	C0G	100	390 ±5%	5.0 x 3.5	2.5	2.5	P1	S1	S2
RPE5C2A391J2□□A03□	C0G	100	390 ±5%	5.0 x 3.5	2.5	5.0	K1	M1	M2
RPE5C2A471J2□□A03□	C0G	100	470 ±5%	5.0 x 3.5	2.5	2.5	P1	S1	S2
RPE5C2A471J2□□A03□	C0G	100	470 ±5%	5.0 x 3.5	2.5	5.0	K1	M1	M2
RPE5C2A561J2□□A03□	C0G	100	560 ±5%	5.0 x 3.5	2.5	2.5	P1	S1	S2
RPE5C2A561J2□□A03□	C0G	100	560 ±5%	5.0 x 3.5	2.5	5.0	K1	M1	M2
RPE5C2A681J2□□A03□	C0G	100	680 ±5%	5.0 x 3.5	2.5	2.5	P1	S1	S2
RPE5C2A681J2□□A03□	C0G	100	680 ±5%	5.0 x 3.5	2.5	5.0	K1	M1	M2
RPE5C2A821J2□□A03□	C0G	100	820 ±5%	5.0 x 3.5	3.15	2.5	P1	S1	S2
RPE5C2A821J2□□A03□	C0G	100	820 ±5%	5.0 x 3.5	3.15	5.0	K1	M1	M2
RPE5C2A102J2□□A03□	C0G	100	1000 ±5%	5.0 x 3.5	3.15	2.5	P1	S1	S2
RPE5C2A102J2□□A03□	C0G	100	1000 ±5%	5.0 x 3.5	3.15	5.0	K1	M1	M2
RPE5C2A122J2□□A03□	C0G	100	1200 ±5%	5.0 x 3.5	3.15	2.5	P1	S1	S2
RPE5C2A122J2□□A03□	C0G	100	1200 ±5%	5.0 x 3.5	3.15	5.0	K1	M1	M2
RPE5C2A152J2□□A03□	C0G	100	1500 ±5%	5.0 x 3.5	3.15	2.5	P1	S1	S2
RPE5C2A152J2□□A03□	C0G	100	1500 ±5%	5.0 x 3.5	3.15	5.0	K1	M1	M2

Two blank columns are filled with the lead style code. Please refer to the 3 columns on the right for the appropriate code.
The last blank column is filled with the packaging code. (B: bulk, A: ammo pack)

High Dielectric Constant Type, X7R Characteristics

Part Number	Temp. Char.	Rated Voltage (Vdc)	Capacitance	Dimensions LxW (mm)	Dimension T (mm)	Lead Space F (mm)	Lead Style Code Bulk	Lead Style Code Taping (1)	Lead Style Code Taping (2)
RPER71E474K2□□A03□	X7R	25	0.47μF ±10%	5.0 x 3.5	3.15	5.0	K1	M1	M2
RPER71E684K2□□C03□	X7R	25	0.68μF ±10%	5.0 x 3.5	3.15	5.0	K1	M1	M2
RPER71E105K2□□C03□	X7R	25	1.0μF ±10%	5.0 x 3.5	3.15	5.0	K1	M1	M2
RPER71E155K3□□C07□	X7R	25	1.5μF ±10%	5.0 x 4.5	3.15	5.0	K1	M1	M2
RPER71E225K3□□C07□	X7R	25	2.2μF ±10%	5.0 x 4.5	3.15	5.0	K1	M1	M2
RPER71H221K2□□A03□	X7R	50	220pF ±10%	5.0 x 3.5	2.5	2.5	P1	S1	S2
RPER71H221K2□□A03□	X7R	50	220pF ±10%	5.0 x 3.5	2.5	5.0	K1	M1	M2
RPER71H331K2□□A03□	X7R	50	330pF ±10%	5.0 x 3.5	2.5	2.5	P1	S1	S2
RPER71H331K2□□A03□	X7R	50	330pF ±10%	5.0 x 3.5	2.5	5.0	K1	M1	M2
RPER71H471K2□□A03□	X7R	50	470pF ±10%	5.0 x 3.5	2.5	2.5	P1	S1	S2
RPER71H471K2□□A03□	X7R	50	470pF ±10%	5.0 x 3.5	2.5	5.0	K1	M1	M2
RPER71H681K2□□A03□	X7R	50	680pF ±10%	5.0 x 3.5	2.5	2.5	P1	S1	S2
RPER71H681K2□□A03□	X7R	50	680pF ±10%	5.0 x 3.5	2.5	5.0	K1	M1	M2
RPER71H102K2□□A03□	X7R	50	1000pF ±10%	5.0 x 3.5	2.5	2.5	P1	S1	S2
RPER71H102K2□□A03□	X7R	50	1000pF ±10%	5.0 x 3.5	2.5	5.0	K1	M1	M2
RPER71H152K2□□A03□	X7R	50	1500pF ±10%	5.0 x 3.5	2.5	2.5	P1	S1	S2
RPER71H152K2□□A03□	X7R	50	1500pF ±10%	5.0 x 3.5	2.5	5.0	K1	M1	M2
RPER71H222K2□□A03□	X7R	50	2200pF ±10%	5.0 x 3.5	2.5	2.5	P1	S1	S2
RPER71H222K2□□A03□	X7R	50	2200pF ±10%	5.0 x 3.5	2.5	5.0	K1	M1	M2
RPER71H332K2□□A03□	X7R	50	3300pF ±10%	5.0 x 3.5	2.5	2.5	P1	S1	S2
RPER71H332K2□□A03□	X7R	50	3300pF ±10%	5.0 x 3.5	2.5	5.0	K1	M1	M2
RPER71H472K2□□A03□	X7R	50	4700pF ±10%	5.0 x 3.5	2.5	2.5	P1	S1	S2
RPER71H472K2□□A03□	X7R	50	4700pF ±10%	5.0 x 3.5	2.5	5.0	K1	M1	M2
RPER71H682K2□□A03□	X7R	50	6800pF ±10%	5.0 x 3.5	2.5	2.5	P1	S1	S2
RPER71H682K2□□A03□	X7R	50	6800pF ±10%	5.0 x 3.5	2.5	5.0	K1	M1	M2
RPER71H103K2□□A03□	X7R	50	10000pF ±10%	5.0 x 3.5	2.5	2.5	P1	S1	S2
RPER71H103K2□□A03□	X7R	50	10000pF ±10%	5.0 x 3.5	2.5	5.0	K1	M1	M2
RPER71H153K2□□A03□	X7R	50	15000pF ±10%	5.0 x 3.5	2.5	2.5	P1	S1	S2
RPER71H153K2□□A03□	X7R	50	15000pF ±10%	5.0 x 3.5	2.5	5.0	K1	M1	M2
RPER71H223K2□□A03□	X7R	50	22000pF ±10%	5.0 x 3.5	2.5	2.5	P1	S1	S2
RPER71H223K2□□A03□	X7R	50	22000pF ±10%	5.0 x 3.5	2.5	5.0	K1	M1	M2
RPER71H333K2□□A03□	X7R	50	33000pF ±10%	5.0 x 3.5	3.15	2.5	P1	S1	S2
RPER71H333K2□□A03□	X7R	50	33000pF ±10%	5.0 x 3.5	3.15	5.0	K1	M1	M2
RPER71H473K2□□A03□	X7R	50	47000pF ±10%	5.0 x 3.5	3.15	2.5	P1	S1	S2
RPER71H473K2□□A03□	X7R	50	47000pF ±10%	5.0 x 3.5	3.15	5.0	K1	M1	M2
RPER71H683K2□□A03□	X7R	50	68000pF ±10%	5.0 x 3.5	3.15	2.5	P1	S1	S2
RPER71H683K2□□A03□	X7R	50	68000pF ±10%	5.0 x 3.5	3.15	5.0	K1	M1	M2
RPER71H104K2□□A03□	X7R	50	0.10μF ±10%	5.0 x 3.5	3.15	2.5	P1	S1	S2
RPER71H104K2□□A03□	X7R	50	0.10μF ±10%	5.0 x 3.5	3.15	5.0	K1	M1	M2
RPER71H154K2□□C03□	X7R	50	0.15μF ±10%	5.0 x 3.5	3.15	2.5	P1	S1	S2
RPER71H154K2□□C03□	X7R	50	0.15μF ±10%	5.0 x 3.5	3.15	5.0	K1	M1	M2
RPER71H224K2□□C03□	X7R	50	0.22μF ±10%	5.0 x 3.5	3.15	2.5	P1	S1	S2
RPER71H224K2□□C03□	X7R	50	0.22μF ±10%	5.0 x 3.5	3.15	5.0	K1	M1	M2
RPER71H334K2□□C03□	X7R	50	0.33μF ±10%	5.0 x 3.5	2.5	2.5	P1	S1	S2
RPER71H334K2□□C03□	X7R	50	0.33μF ±10%	5.0 x 3.5	2.5	5.0	K1	M1	M2
RPER71H474K2□□C03□	X7R	50	0.47μF ±10%	5.0 x 3.5	3.15	2.5	P1	S1	S2
RPER71H474K2□□C03□	X7R	50	0.47μF ±10%	5.0 x 3.5	3.15	5.0	K1	M1	M2
RPER71H684K3□□C03□	X7R	50	0.68μF ±10%	5.0 x 4.5	3.15	2.5	P1	S1	S2
RPER71H684K3□□C03□	X7R	50	0.68μF ±10%	5.0 x 4.5	3.15	5.0	K1	M1	M2
RPER71H105K3□□C07□	X7R	50	1.0μF ±10%	5.0 x 4.5	3.15	2.5	P1	S1	S2
RPER71H105K3□□C07□	X7R	50	1.0μF ±10%	5.0 x 4.5	3.15	5.0	K1	M1	M2
RPER71H155K8□□C03□	X7R	50	1.5μF ±10%	7.5 x 5.5	4.0	5.0	K1	M1	M2
RPER71H225K8□□C03□	X7R	50	2.2μF ±10%	7.5 x 5.5	4.0	5.0	K1	M1	M2
RPER71H335K5□□C03□	X7R	50	3.3μF ±10%	7.5 x 7.5	5.0	5.0	B1	E1	E2

Continued on the following page.

Continued from the preceding page.

Part Number	Temp. Char.	Rated Voltage (Vdc)	Capacitance	Dimensions LxW (mm)	Dimension T (mm)	Lead Space F (mm)	Lead Style Code Bulk	Lead Style Code Taping (1)	Lead Style Code Taping (2)
RPER71H475K5□□C03□	X7R	50	4.7µF ±10%	7.5 x 7.5	4.0	5.0	B1	E1	E2
RPER72A221K2□□B03□	X7R	100	220pF ±10%	5.0 x 3.5	2.5	2.5	P1	S1	S2
RPER72A221K2□□B03□	X7R	100	220pF ±10%	5.0 x 3.5	2.5	5.0	K1	M1	M2
RPER72A331K2□□B03□	X7R	100	330pF ±10%	5.0 x 3.5	2.5	2.5	P1	S1	S2
RPER72A331K2□□B03□	X7R	100	330pF ±10%	5.0 x 3.5	2.5	5.0	K1	M1	M2
RPER72A471K2□□B03□	X7R	100	470pF ±10%	5.0 x 3.5	2.5	2.5	P1	S1	S2
RPER72A471K2□□B03□	X7R	100	470pF ±10%	5.0 x 3.5	2.5	5.0	K1	M1	M2
RPER72A681K2□□B03□	X7R	100	680pF ±10%	5.0 x 3.5	2.5	2.5	P1	S1	S2
RPER72A681K2□□B03□	X7R	100	680pF ±10%	5.0 x 3.5	2.5	5.0	K1	M1	M2
RPER72A102K2□□A03□	X7R	100	1000pF ±10%	5.0 x 3.5	2.5	2.5	P1	S1	S2
RPER72A102K2□□A03□	X7R	100	1000pF ±10%	5.0 x 3.5	2.5	5.0	K1	M1	M2
RPER72A152K2□□A03□	X7R	100	1500pF ±10%	5.0 x 3.5	2.5	2.5	P1	S1	S2
RPER72A152K2□□A03□	X7R	100	1500pF ±10%	5.0 x 3.5	2.5	5.0	K1	M1	M2
RPER72A222K2□□A03□	X7R	100	2200pF ±10%	5.0 x 3.5	2.5	2.5	P1	S1	S2
RPER72A222K2□□A03□	X7R	100	2200pF ±10%	5.0 x 3.5	2.5	5.0	K1	M1	M2
RPER72A332K2□□A03□	X7R	100	3300pF ±10%	5.0 x 3.5	2.5	2.5	P1	S1	S2
RPER72A332K2□□A03□	X7R	100	3300pF ±10%	5.0 x 3.5	2.5	5.0	K1	M1	M2
RPER72A472K2□□A03□	X7R	100	4700pF ±10%	5.0 x 3.5	2.5	2.5	P1	S1	S2
RPER72A472K2□□A03□	X7R	100	4700pF ±10%	5.0 x 3.5	2.5	5.0	K1	M1	M2
RPER72A682K2□□A03□	X7R	100	6800pF ±10%	5.0 x 3.5	2.5	2.5	P1	S1	S2
RPER72A682K2□□A03□	X7R	100	6800pF ±10%	5.0 x 3.5	2.5	5.0	K1	M1	M2
RPER72A103K2□□A03□	X7R	100	10000pF ±10%	5.0 x 3.5	3.15	2.5	P1	S1	S2
RPER72A103K2□□A03□	X7R	100	10000pF ±10%	5.0 x 3.5	3.15	5.0	K1	M1	M2
RPER72A153K2□□A03□	X7R	100	15000pF ±10%	5.0 x 3.5	3.15	2.5	P1	S1	S2
RPER72A153K2□□A03□	X7R	100	15000pF ±10%	5.0 x 3.5	3.15	5.0	K1	M1	M2
RPER72A223K2□□A03□	X7R	100	22000pF ±10%	5.0 x 3.5	3.15	2.5	P1	S1	S2
RPER72A223K2□□A03□	X7R	100	22000pF ±10%	5.0 x 3.5	3.15	5.0	K1	M1	M2
RPER72A333K2□□C03□	X7R	100	33000pF ±10%	5.0 x 3.5	3.15	2.5	P1	S1	S2
RPER72A333K2□□C03□	X7R	100	33000pF ±10%	5.0 x 3.5	3.15	5.0	K1	M1	M2
RPER72A473K2□□C03□	X7R	100	47000pF ±10%	5.0 x 3.5	3.15	2.5	P1	S1	S2
RPER72A473K2□□C03□	X7R	100	47000pF ±10%	5.0 x 3.5	3.15	5.0	K1	M1	M2
RPER72A683K3□□C07□	X7R	100	68000pF ±10%	5.0 x 4.5	3.15	2.5	P1	S1	S2
RPER72A683K3□□C07□	X7R	100	68000pF ±10%	5.0 x 4.5	3.15	5.0	K1	M1	M2
RPER72A104K3□□C07□	X7R	100	0.10µF ±10%	5.0 x 4.5	3.15	2.5	P1	S1	S2
RPER72A104K3□□C07□	X7R	100	0.10µF ±10%	5.0 x 4.5	3.15	5.0	K1	M1	M2
RPER72A154K8□□C03□	X7R	100	0.15µF ±10%	7.5 x 5.5	4.0	5.0	K1	M1	M2
RPER72A224K8□□C03□	X7R	100	0.22µF ±10%	7.5 x 5.5	4.0	5.0	K1	M1	M2
RPER72A334K5□□C03□	X7R	100	0.33µF ±10%	7.5 x 7.5	4.0	5.0	B1	E1	E2
RPER72A474K8□□C03□	X7R	100	0.47µF ±10%	7.5 x 5.5	4.0	5.0	K1	M1	M2
RPER72A684K6□□F14□	X7R	100	0.68µF ±10%	10.0 x 10.0	4.0	5.0	B1	E1	E2
RPER72A105K5□□C03□	X7R	100	1.0µF ±10%	7.5 x 7.5	4.0	5.0	B1	E1	E2
RPER72A155K7□□F03□	X7R	100	1.5µF ±10%	12.5 x 12.5	5.0	10.0	C1	-	-
RPER72A225K7□□F03□	X7R	100	2.2µF ±10%	12.5 x 12.5	5.0	10.0	C1	-	-

Two blank columns are filled with the lead style code. Please refer to the 3 columns on the right for the appropriate code.
The last blank column is filled with the packaging code. (B: bulk, A: ammo pack)

High Dielectric Constant Type, Y5V Characteristics

Part Number	Temp. Char.	Rated Voltage (Vdc)	Capacitance	Dimensions LxW (mm)	Dimension T (mm)	Lead Space F (mm)	Lead Style Code Bulk	Lead Style Code Taping (1)	Lead Style Code Taping (2)
RPEF51H102Z2□□A03□	Y5V	50	1000pF +80/-20%	5.0 x 3.5	2.5	2.5	P1	S1	S2
RPEF51H102Z2□□A03□	Y5V	50	1000pF +80/-20%	5.0 x 3.5	2.5	5.0	K1	M1	M2
RPEF51H222Z2□□A03□	Y5V	50	2200pF +80/-20%	5.0 x 3.5	2.5	2.5	P1	S1	S2
RPEF51H222Z2□□A03□	Y5V	50	2200pF +80/-20%	5.0 x 3.5	2.5	5.0	K1	M1	M2
RPEF51H472Z2□□A03□	Y5V	50	4700pF +80/-20%	5.0 x 3.5	2.5	2.5	P1	S1	S2
RPEF51H472Z2□□A03□	Y5V	50	4700pF +80/-20%	5.0 x 3.5	2.5	5.0	K1	M1	M2

Continued on the following page.

Continued from the preceding page.

Part Number	Temp. Char.	Rated Voltage (Vdc)	Capacitance	Dimensions LxW (mm)	Dimension T (mm)	Lead Space F (mm)	Lead Style Code Bulk	Lead Style Code Taping (1)	Lead Style Code Taping (2)
RPEF51H103Z2□□A03□	Y5V	50	10000pF +80/-20%	5.0 x 3.5	2.5	2.5	P1	S1	S2
RPEF51H103Z2□□A03□	Y5V	50	10000pF +80/-20%	5.0 x 3.5	2.5	5.0	K1	M1	M2
RPEF51H223Z2□□A03□	Y5V	50	22000pF +80/-20%	5.0 x 3.5	2.5	2.5	P1	S1	S2
RPEF51H223Z2□□A03□	Y5V	50	22000pF +80/-20%	5.0 x 3.5	2.5	5.0	K1	M1	M2
RPEF51H473Z2□□A03□	Y5V	50	47000pF +80/-20%	5.0 x 3.5	2.5	2.5	P1	S1	S2
RPEF51H473Z2□□A03□	Y5V	50	47000pF +80/-20%	5.0 x 3.5	2.5	5.0	K1	M1	M2
RPEF51H104Z2□□A03□	Y5V	50	0.10μF +80/-20%	5.0 x 3.5	2.5	2.5	P1	S1	S2
RPEF51H104Z2□□A03□	Y5V	50	0.10μF +80/-20%	5.0 x 3.5	2.5	5.0	K1	M1	M2
RPEF51H224Z2□□A03□	Y5V	50	0.22μF +80/-20%	5.0 x 3.5	3.15	2.5	P1	S1	S2
RPEF51H224Z2□□A03□	Y5V	50	0.22μF +80/-20%	5.0 x 3.5	3.15	5.0	K1	M1	M2
RPEF51H474Z2□□C03□	Y5V	50	0.47μF +80/-20%	5.0 x 3.5	3.15	2.5	P1	S1	S2
RPEF51H474Z2□□C03□	Y5V	50	0.47μF +80/-20%	5.0 x 3.5	3.15	5.0	K1	M1	M2

Two blank columns are filled with the lead style code. Please refer to the 3 columns on the right for the appropriate code.
The last blank column is filled with the packaging code. (B: bulk, A: ammo pack)

Specifications and Test Methods

No.	Item		Specifications: Temperature Compensating Type	Specifications: High Dielectric Constant Type	Test Method
1	Operating Temperature Range		-55 to +125˚C	Char. X7R : -55 to +125˚C Char. Y5V : -30 to +85˚C	–
2	Rated Voltage		See previous pages		The rated voltage is defined as the maximum voltage that may be applied continuously to the capacitor. When AC voltage is superimposed on DC voltage, V_{P-P} or V_{0-P}, whichever is larger, should be maintained within the rated voltage range.
3	Appearance		No defects or abnormalities		Visual inspection
4	Dimension and Marking		See previous pages		Visual inspection, Vernier Caliper
5	Dielectric Strength	Between Terminals	No defects or abnormalities		The capacitors should not be damaged when DC voltages of 300%* of the rated voltage are applied between the terminals for 1 to 5 sec. (Charge/Discharge current ≦ 50mA) *250% for char. X7R, Y5V
		Body Insulation	No defects or abnormalities		The capacitor is placed in a container with metal balls of 1mm diameter so that each terminal, short-circuited, is kept approximately 2mm from the balls as shown in the figure, and 250% of the rated DC voltage is impressed for 1 to 5 sec. between capacitor terminals and metal balls. (Charge/Discharge current ≦ 50mA) 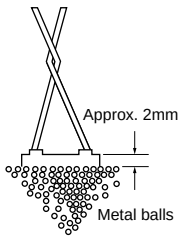
6	Insulation Resistance	Between Terminals	C ≦ 0.047μF : 10,000MΩ min. C > 0.047μF : 500MΩ • μF min. C : Nominal capacitance		The insulation resistance should be measured with a DC voltage not exceeding the rated voltage at normal temperature and humidity and within 2 min. of charging. (Charge/Discharge current ≦ 50mA)
7	Capacitance		Within the specified tolerance		The capacitance, Q/D.F. should be measured at 25˚C at the frequency and voltage shown in the table. Item / Capacitance: 1000pF and below — Frequency: 1±0.1MHz; Voltage: AC0.5 to 5V (r.m.s.) Item / Capacitance: more than 1000pF — Frequency: 1±0.1kHz; Voltage: AC1±0.2V (r.m.s.)
8	Q/Dissipation Factor (D.F.)		30pF min. : Q ≧ 1,000 30pF max. : Q ≧ 400+20C C : Nominal capacitance (pF)	Char. X7R : 0.025 max. Char. Y5V : 0.05 max.	
9	Capacitance Temperature Characteristics	Capacitance Change	Within the specified tolerance (Table A on last column)	Within the specified tolerance (Table B on last column)	The capacitance change should be measured after 5 min. at each specified temperature stage. (1) Temperature Compensating Type The temperature coefficient is determined using the capacitance measured in step 3 as a reference. When cycling the temperature sequentially from step 1 through 5 (-55 to +125˚C) the capacitance should be within the specified tolerance for the temperature coefficient and capacitance change as shown in Table A. The capacitance drift is calculated by dividing the differences between the maximum and minimum measured values in step 1, 3 and 5 by the cap. value in step 3. Step / Temperature (°C): 1 — 25±2; 2 — -55±3; 3 — 25±2; 4 — 125±3; 5 — 25±2 (2) High Dielectric Constant Type The ranges of capacitance change compared with the 25˚C value over the temperature ranges as shown in Table B should be within the specified ranges.
		Temperature Coefficient	Within the specified tolerance (Table A on last column)		
		Capacitance Drift	Within ±0.2% or ±0.05pF, whichever is larger		

Continued on the following page.

Specifications and Test Methods

Continued from the preceding page.

No.	Item		Specifications: Temperature Compensating Type	Specifications: High Dielectric Constant Type	Test Method
10	Terminal Strength	Tensile Strength	Termination not to be broken or loosened		As in the figure, fix the capacitor body, apply the force gradually to each lead in the radial direction of the capacitor until reaching 10N and then keep the force applied for 10±1 sec. 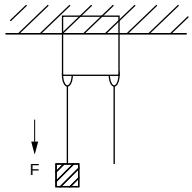
		Bending Strength	Termination not to be broken or loosened		Each lead wire should be subjected to a force of 2.5N and then bent 90° at the point of egress in one direction. Each wire is then returned to the original position and bent 90° in the opposite direction at the rate of one bend per 2 to 3 sec.
11	Vibration Resistance	Appearance	No defects or abnormalities		The capacitor is soldered securely to a supporting terminal and a 10 to 55Hz vibration of 1.5mm peak-peak amplitude is applied for 6 hrs. total, 2 hrs. in each mutually perpendicular direction. Allow 1 min. to cycle the frequency from 10Hz to 55Hz and the converse.
		Capacitance	Within the specified tolerance		
		Q/D.F.	30pF min. : Q ≧ 1,000 30pF max. : Q ≧ 400+20C C : Nominal capacitance (pF)	Char. X7R : 0.025 max. Char. Y5V : 0.05 max.	
12	Solderability of Leads		Lead wire should be soldered with uniform coating on the axial direction over 3/4 of the circumferential direction.		The terminal of a capacitor is dipped into a 25% ethanol (JIS-K-8101) solution of rosin (JIS-K-5902) and then into molten solder for 2±0.5 sec. In both cases the depth of dipping is up to about 1.5mm to 2mm from the terminal body. Temp. of solder: 245±5°C Lead Free Solder (Sn-3.0Ag-0.5Cu) 235±5°C H60A or H63A Eutectic Solder
13	Resistance to Soldering Heat	Appearance	No defects or abnormalities		The lead wire is immersed in the melted solder 1.5mm to 2mm from the main body at 350±10°C for 3.5±0.5 sec. The specified items are measured after 24±2 hrs. (temperature compensating type) or 48±4 hrs. (high dielectric type). • Initial measurement for high dielectric constant type The capacitors are heat treated for 1 hr. at $150^{+}_{-10}{}^{0}$°C, allowed to set at room temperature for 48±4 hrs., and given an initial measurement.
		Capacitance Change	Within ±2.5% or ±0.25pF (whichever is larger)	Char. X7R : Within ±7.5% Char. Y5V : Within ±20%	
		Dielectric Strength (Between Terminals)	No defects		
14	Temperature and Immersion Cycle	Appearance	No defects or abnormalities		First, repeat the following temperature/time cycle 5 times: ≫ lowest operating temperature ±3°C/30±3 min. ≫ ordinary temperature/3 min. max. ≫ highest operating temperature ±3°C/30±3 min. ≫ ordinary temperature/3 min. max. Next, repeat twice the successive cycles of immersion, each cycle consisting of immersion in a fresh water at 65^{+5}_{-0}°C for 15 min. and immersion in a saturated aqueous solution of salt at 0±3°C for 15 min. The capacitor is then promptly washed in running water, dried with a drying cloth, and allowed to sit at room temperature for 24±2 hrs. (temperature compensating type) or 48±4 hrs. (high dielectric type). • Initial measurement for high dielectric constant type The capacitors are heat treated for 1 hr. at $150^{+}_{-10}{}^{0}$°C, allowed to sit at room temperature for 48 ±4 hrs., and given an initial measurement.
		Capacitance Change	Within ±5% or ±0.5pF (whichever is larger)	Char. X7R : Within ±12.5% Char. Y5V : Within ±30%	
		Q/D.F.	30pF min. : Q ≧ 350 10pF to 30pF : Q ≧ 275+5C/2 10pF max. : Q ≧ 200+10C C : Nominal capacitance (pF)	Char. X7R : 0.05 max. Char. Y5V : 0.075 max.	
		Insulation Resistance	1,000MΩ or 50MΩ • μF min. (whichever is smaller)		
		Dielectric Strength (Between Terminals)	No defects or abnormalities		

Continued on the following page.

Specifications and Test Methods

Continued from the preceding page.

No.	Item		Specifications		Test Method
			Temperature Compensating Type	High Dielectric Constant Type	
15	Humidity (Steady State)	Appearance	No defects or abnormalities		Set the capacitor for 500 $^{+24}_{0}$ hrs. at 40±2˚C in 90 to 95% humidity. Remove and set for 24±2 hrs. (temperature compensating type) and 48±4 hrs. (high dielectric constant type) at room temperature, then measure.
		Capacitance Change	Within ±5% or ±0.5pF (whichever is larger)	Char. X7R : Within ±12.5% Char. Y5V : Within ±30%	
		Q/D.F.	30pF min. : Q ≧ 350 10pF to 30pF : Q ≧ 275+5C/2 10pF max. : Q ≧ 200+10C C : Nominal capacitance (pF)	Char. X7R : 0.05 max. Char. Y5V : 0.075 max.	
		Insulation Resistance	1,000MΩ or 50MΩ • μF min. (whichever is smaller)		
16	Humidity Load	Appearance	No defects or abnormalities		Apply the rated voltage for 500 $^{+24}_{0}$ hrs. at 40±2˚C and in 90 to 95% humidity. Remove and set for 24±2 hrs. (temperature compensating type) and 48±4 hrs. (high dielectric constant type) at room temperature, then measure. (Charge/Discharge current ≦ 50mA)
		Capacitance Change	Within ±7.5% or ±0.75pF (whichever is larger)	Char. X7R : Within ±12.5% Char. Y5V : Within ±30%	
		Q/D.F.	30pF min. : Q ≧ 200 30pF max. : Q ≧ 100+10C/3 C : Nominal capacitance (pF)	Char. X7R : 0.05 max. Char. Y5V : 0.075 max.	
		Insulation Resistance	500MΩ or 25MΩ • μF min. (whichever is smaller)		
17	High Temperature Load	Appearance	No defects or abnormalities		Apply 200% of the rated voltage for 1000 $^{+48}_{0}$ hrs. at the maximum operating temperature. Remove and set for 24±2 hrs. (temperature compensating type) and 48 ±4 hrs. (high dielectric constant type) at room temperature, then measure. (Charge/Discharge current ≦ 50mA) • Initial measurement for high dielectric constant type A voltage treatment should be given to the capacitor in which a DC voltage of 200% of the rated voltage is applied for 1 hr. at the maximum operating temperature ±3˚C. Then set for 48±4 hrs. at room temperature and conduct initial measurement.
		Capacitance Change	Within ±3% or ±0.3pF (whichever is larger)	Char. X7R : Within ±12.5% Char. Y5V : Within ±30%	
		Q/D.F.	30pF min. : Q ≧ 350 10pF to 30pF : Q ≧ 275+5C/2 10pF max. : Q ≧ 200+10C C : Nominal capacitance (pF)	Char. X7R : 0.04 max. Char. Y5V : 0.075 max.	
		Insulation Resistance	1,000MΩ or 50MΩ • μF min. (whichever is smaller)		
18	Solvent Resistance	Appearance	No defects or abnormalities		The capacitor should be fully immersed, unagitated, in reagent at 20 to 25˚C for 30±5 sec. and then removed gently. Marking on the surface of the capacitor should immediately be visually examined. Reagent: • Isopropyl alcohol
		Marking	Legible		

Table A

Char.	Nominal Values (ppm/˚C) *1	Capacitance Change from 25˚C (%)					
		-55˚C		-30˚C		-10˚C	
		Max.	Min.	Max.	Min.	Max.	Min.
C0G	0±30	0.58	-0.24	0.40	-0.17	0.25	-0.11

*1: Nominal values denote the temperature coefficient within a range of 25 to 125˚C

Table B

Char.	Temp. Range	Reference Temp.	Cap. Change Rate
X7R	-55 to +125˚C	25˚C	Within ± 15%
Y5V	-30 to + 85˚C		Within $^{+22}_{-82}$%

Radial Lead Type Monolithic Ceramic Capacitors

RPE Series Small Size, Large Capacitance (DC50V)

■ Features

1. The RPE series capacitors have small dimensions, large capacitance, and a capacity volume ratio of 10 micro F/cm cubed, close to that of electrolytic capacitors. They do not have polarity.
2. Excellent frequency characteristics and due to their small internal inductance are suitable for high frequencies.
3. They are not coated with wax so there is no change in their exterior appearance due to the outflow of wax during soldering or solvent during cleansing.
4. They are highly nonflammable, having characteristics equivalent to the UL94V-0 standard.
5. We design capacitors in much more compact size than current RPE Series, having reduced the diameter by 70% max.

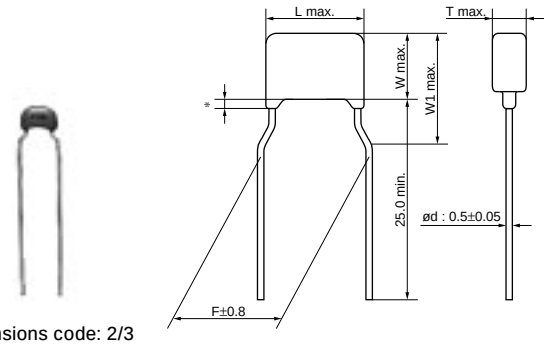

Dimensions code: 2/3
Lead style code: K1

∗ Coating extension does not exceed the end of the lead bend.
· Lead Wire : Solder Coated Copper Wire or Solder Coated CP Wire

(in mm)

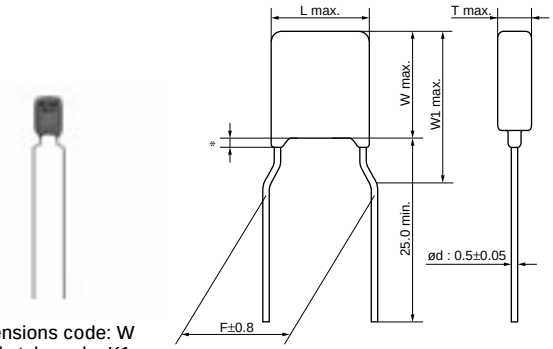

Dimensions code: W
Lead style code: K1

∗ Coating extension does not exceed the end of the lead bend.
· Lead Wire : Solder Coated Copper Wire or Solder Coated CP Wire

(in mm)

■ Dimensions

Dimensions and Lead Style Code	Dimensions (mm)					
	L	W	W1	T	F	d
2K1/2M1	5.5	4.0	6.0	Depends on Part Number List	5.0	0.5
3K1/3M1	5.5	5.0	7.5		5.0	0.5
WK1/WM1	5.5	7.5	10.0		5.0	0.5

Continued on the following page. ↗

Continued from the preceding page.

■ Marking

Dimensions Code \ Rated Voltage	DC50V
Temp. Char.	X7R
2	
3	
W	
Temperature Characteristics	Marked with code (X7R char.: C)
Nominal Capacitance	Marked with 3 figures
Capacitance Tolerance	Marked with code
Rated Voltage	Marked with code (DC50V: 5)
Manufacturer's Identification	Marked with Ⓜ

High Dielectric Constant Type, X7R Characteristics

Part Number	Temp. Char.	Rated Voltage (Vdc)	Capacitance (μF)	Dimensions LxW (mm)	Dimension T (mm)	Lead Space F (mm)	Lead Style Code Bulk	Lead Style Code Taping (1)	Lead Style Code Taping (2)
RPER71H105K2□□C60□	X7R	50	1.0 ±10%	5.5 x 4.0	3.15	5.0	K1	M1	-
RPER71H155K2□□C60□	X7R	50	1.5 ±10%	5.5 x 4.0	3.15	5.0	K1	M1	-
RPER71H225K2□□C60□	X7R	50	2.2 ±10%	5.5 x 4.0	3.15	5.0	K1	M1	-
RPER71H335K3□□C60□	X7R	50	3.3 ±10%	5.5 x 5.0	4.0	5.0	K1	M1	-
RPER71H475K3□□C60□	X7R	50	4.7 ±10%	5.5 x 5.0	4.0	5.0	K1	M1	-
RPER71H106MW□□C60□	X7R	50	10 ±20%	5.5 x 7.5	4.0	5.0	K1	M1	-

Two blank columns are filled with the lead style code. Please refer to the 3 columns on the right for the appropriate code.
The last blank column is filled with the packaging code. (B: bulk, A: ammo pack)

Specifications and Test Methods

No.	Item		Specifications	Test Method
1	Operating Temperature Range		-55 to +125˚C	–
2	Appearance		No defects or abnormalities	Visual inspection
3	Dimension and Marking		See previous pages	Visual inspection, Vernier Caliper
4	Dielectric Strength	Between Terminals	No defects or abnormalities	The capacitor should not be damaged when DC voltage of 250% of the rated voltage is applied between the terminations for 1 to 5 sec. (Charge/Discharge current ≦ 50mA)
		Body Insulation	No defects or abnormalities	The capacitor is placed in a container with metal balls of 1mm diameter so that each terminal, short-circuit, is kept approximately 2mm from the balls as shown in the figure, and 250% of the rated DC voltage is impressed for 1 to 5 sec. between capacitor terminals and metal balls. (Charge/Discharge current ≦ 50mA) 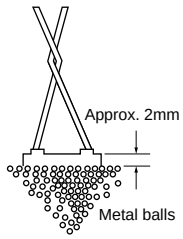
5	Insulation Resistance	Between Terminals	500MΩ · μF min.	The insulation resistance should be measured with a DC voltage not exceeding the rated voltage at normal temperature and humidity and within 2 min. of charging. (Charge/Discharge current ≦ 50mA)
6	Capacitance		Within the specified tolerance	The capacitance/D.F. should be measured at the frequency of 1±0.1kHz and a voltage of AC1±0.2V(r.m.s.)
7	Dissipation Factor (D.F.)		0.025 max.	
8	Capacitance Temperature Characteristics		Within ±15%	The capacitance change should be measured after 5 min. at each specified temperature stage.

Step	Temperature (˚C)
1	25±2
2	-55±3
3	25±2
4	125±3
5	25±2

9	Terminal Strength	Tensile Strength	Termination not to be broken or loosened	As in the figure, fix the capacitor body, apply the force gradually to each lead in the radial direction of the capacitor until reaching 10N and then keep the force applied for 10±1 sec. 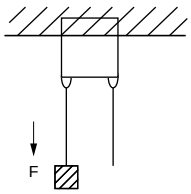
		Bending Strength	Termination not to be broken or loosened	Each lead wire should be subjected to a force of 2.5N and then bent 90˚ at the point of egress in one direction. Each wire is then returned to the original position and bent 90˚ in the opposite direction at the rate of one bend per 2 to 3 sec.
10	Vibration Resistance	Appearance	No defects or abnormalities	The capacitor should be firmly soldered to the supporting lead wire and vibrated at a frequency range of 10 to 55Hz, 1.5mm in total amplitude, with about a 1 minute rate of vibration change from 10Hz to 55Hz and back to 10Hz. Apply for a total of 6 hrs., 2 hrs. each in 3 mutually perpendicular directions.
		Capacitance	Within the specified tolerance	
		D.F.	0.025 max.	

Continued on the following page.

Specifications and Test Methods

Continued from the preceding page.

No.	Item		Specifications	Test Method
11	Solderability of Leads		Lead wire should be soldered with uniform coating on the axial direction over 3/4 of the circumferential direction.	The terminal of a capacitor is dipped into a solution of ethanol (JIS-K-8101) and rosin (JIS-K-5902) (25% rosin in weight proportion) and then into molten solder (JIS-Z-3282) for 2±0.5 sec. In both cases the depth of dipping is up to about 1.5 to 2mm from the terminal body. Temp. of solder: 245±5˚C Lead Free Solder (Sn-3.0Ag-0.5Cu) 235±5˚C H60A or H63A Eutectic Solder
12	Resistance to Soldering Heat	Appearance	No defects or abnormalities	The lead wire is immersed in the melted solder 1.5 to 2mm from the main body at 350±10˚C for 3.5±0.5 sec. The specified items are measured after 48±4 hrs. • Pretreatment Perform a heat treatment at 150+0/-10˚C for 1 hr., and then let sit at room temperature for 48±4 hrs.
		Capacitance Change	Within ±7.5%	
		Dielectric Strength (Between Terminals)	No defects	
13	Temperature Cycle	Appearance	No defects or abnormalities	The capacitor should be subjected to 200 temperature cycles. (5 temperature cycles for dimensions code W) Step / Temperature (˚C) / Time (min) 1 / -55±3 / 30±3 2 / Room Temp. / 3 max. 3 / 125±3 / 30±3 4 / Room Temp. / 3 max.
		Capacitance Change	Within ±12.5%	
		D.F.	0.05 max.	
		Insulation Resistance	50MΩ · μF min.	
		Dielectric Strength (Between Terminals)	No defects or abnormalities	
14	Humidity (Steady State)	Appearance	No defects or abnormalities	Set the capacitor at 40±2˚C and relative humidity of 90 to 95% for 500 $^{+24}_{0}$ hrs. Remove and set for 48±4 hrs. at room temperature, then measure.
		Capacitance Change	Within ±12.5%	
		D.F.	0.05 max.	
		Insulation Resistance	50MΩ · μF min.	
15	Humidity Load	Appearance	No defects or abnormalities	Apply the rated voltage at 40±2˚C and relative humidity of 90 to 95% for 500 $^{+24}_{0}$ hrs. Remove and set for 48±4 hrs. at room temperature, then measure. (Charge/Discharge current ≦ 50mA)
		Capacitance Change	Within ±12.5%	
		D.F.	0.05 max.	
		Insulation Resistance	50MΩ · μF min.	
16	High Temperature Load	Appearance	No defects or abnormalities	Apply a DC voltage of 150% of the rated voltage for 1000 $^{+48}_{0}$ hrs. at the maximum operating temperature. Remove and set for 48±4 hrs. at room temperature, then measure. (Charge/Discharge current ≦ 50mA) • Pretreatment Apply test voltage for 1 hr., at test temperature. Remove and set for 48±4 hrs. at room temperature.
		Capacitance Change	Within ±12.5%	
		D.F.	0.04 max.	
		Insulation Resistance	50MΩ · μF min.	
17	Solvent Resistance	Appearance	No defects or abnormalities	The capacitor should be fully immersed, unagitated, in reagent at 20 to 25 ˚C for 30±5 sec. and then removed gently. Marking on the surface of the capacitor should immediately be visually examined. Reagent : • Isopropyl alcohol
		Marking	Legible	

Radial Lead Type Monolithic Ceramic Capacitors

RH Series 150°C max. (for Automotive) (DC50V-DC100V)

■ Features

1. Small size and large capacitance
2. Low ESR and ESL suitable for high frequency
3. Applied maximum temperature up to 150 deg. C
   Note: Maximum accumulative time to 150 deg. C is within 2000 hours.
4. Coated with epoxy (LxW=4.0x3.5mm) or silicone (LxW=4.0x3.5mm over) resin which is suitable for heat cycle.
5. The RH series meet AEC-Q200 requirements.

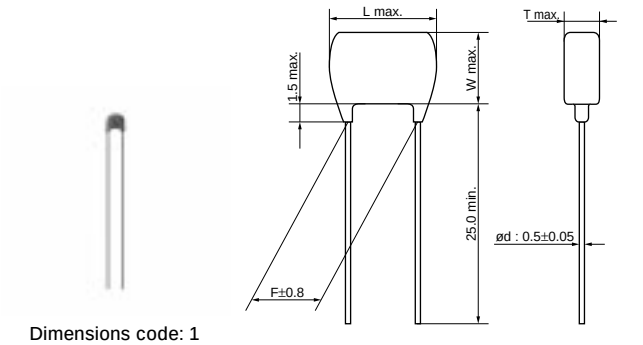

Dimensions code: 1
Lead style code: A2

· Lead Wire : Solder Coated Copper Wire or Solder Coated CP Wire

(in mm)

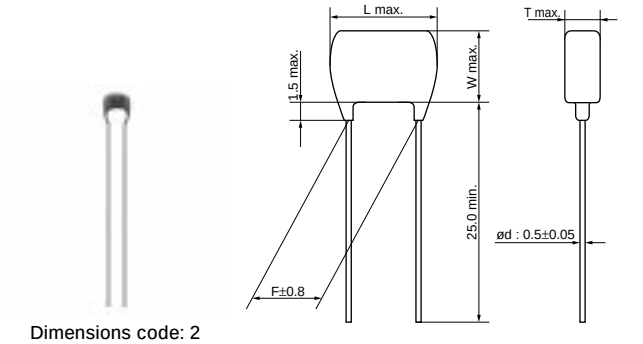

Dimensions code: 2
Lead style code: A2

· Lead Wire : Solder Coated Copper Wire or Solder Coated CP Wire

(in mm)

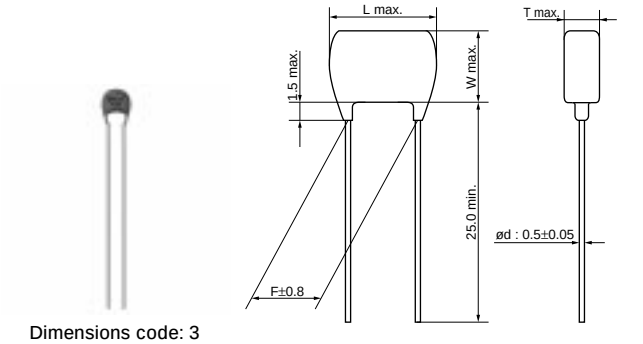

Dimensions code: 3
Lead style code: A2

· Lead Wire : Solder Coated Copper Wire or Solder Coated CP Wire

(in mm)

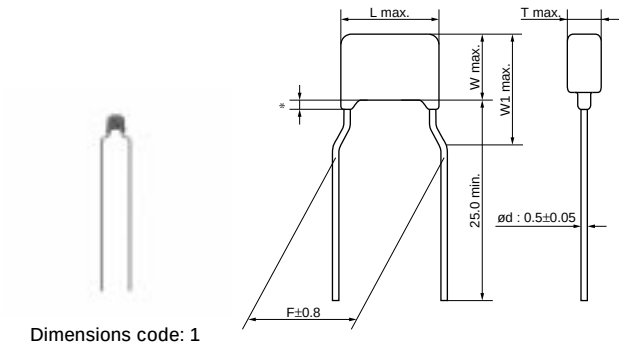

Dimensions code: 1
Lead style code: K1

* Coating extension does not exceed the end of the lead bend.
· Lead Wire : Solder Coated Copper Wire or Solder Coated CP Wire

(in mm)

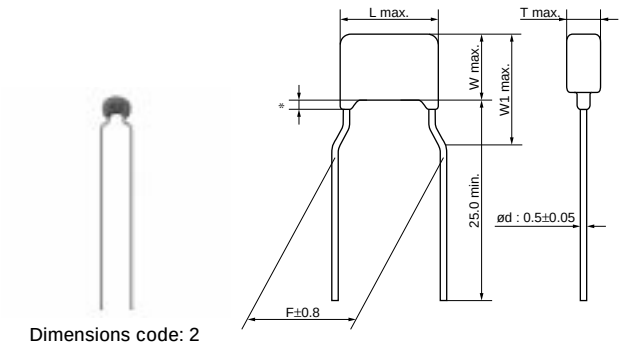

Dimensions code: 2
Lead style code: K1

* Coating extension does not exceed the end of the lead bend.
· Lead Wire : Solder Coated Copper Wire or Solder Coated CP Wire

(in mm)

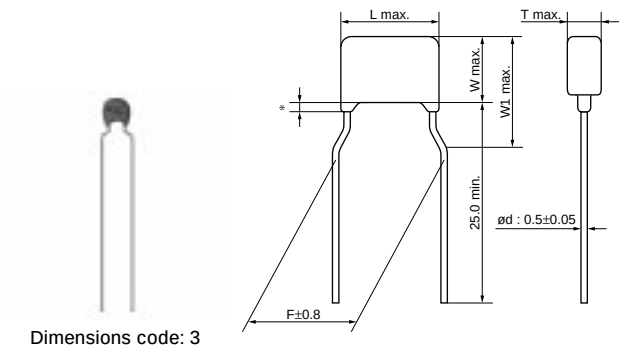

Dimensions code: 3
Lead style code: K1

* Coating extension does not exceed the end of the lead bend.
· Lead Wire : Solder Coated Copper Wire or Solder Coated CP Wire

(in mm)

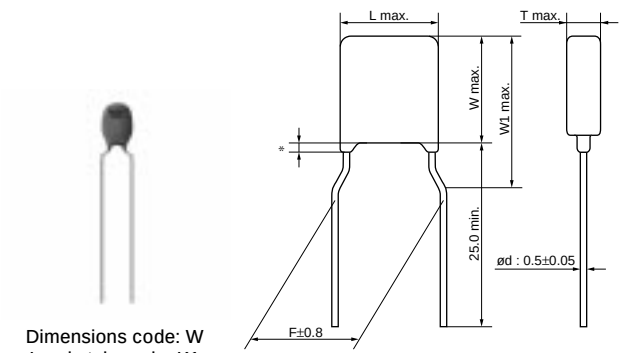

Dimensions code: W
Lead style code: K1

* Coating extension does not exceed the end of the lead bend.
· Lead Wire : Solder Coated Copper Wire or Solder Coated CP Wire

(in mm)

Continued on the following page. ↗

Continued from the preceding page.

■ Dimensions

Dimensions and Lead Style Code	Dimensions (mm)					
	L	W	W1	T	F	d
1A2/1DB	4.0	3.5	-	See the individual product specifications	2.5	0.5
1K1/1M1	4.0	3.5	5.0		5.0	0.5
2A2/2DB	5.7	4.5	-		2.5	0.5
2K1/2M1	5.7	4.5	7.0		5.0	0.5
3A2/3DB	6.0	5.5	-		2.5	0.5
3K1/3M1	6.0	5.5	7.5		5.0	0.5
WK1/WM1	6.0	8.0	10.0		5.0	0.5

3

■ Marking

Dimensions Code \ Type	Temperature Compensating Type	High Dielectric Constant Type	
Rated Voltage	DC50V, DC100V	DC50V	DC100V
Temp. Char.	X8G	X8L	
1	8 102J	8 104K	8 103K
2	—	Ⓜ 105 K58	Ⓜ 104 K18
3, W	—	Ⓜ 335 K58	—
Temperature Characteristics	Marked with code (X8G, X8L char.: 8)		
Nominal Capacitance	Marked with 3 figures		
Capacitance Tolerance	Marked with code		
Rated Voltage	Marked with code (DC50V: 5, DC100V: 1) A part is omitted (Please refer to the marking example.)		
Manufacturer's Identification	Marked with Ⓜ A part is omitted (Please refer to the marking example.)		

Temperature Compensating Type, X8G Characteristics

Part Number	Temp. Char.	Rated Voltage (Vdc)	Capacitance (pF)	Dimensions LxW (mm)	Dimension T (mm)	Lead Space F (mm)	Lead Style Code Bulk	Lead Style Code Taping (1)	Lead Style Code Taping (2)
RHE5G1H101J1□□A03□	X8G	50	100 ±5%	4.0 x 3.5	2.5	2.5	A2	DB	-
RHE5G1H101J1□□A03□	X8G	50	100 ±5%	4.0 x 3.5	2.5	5.0	K1	M1	-
RHE5G1H121J1□□A03□	X8G	50	120 ±5%	4.0 x 3.5	2.5	2.5	A2	DB	-
RHE5G1H121J1□□A03□	X8G	50	120 ±5%	4.0 x 3.5	2.5	5.0	K1	M1	-
RHE5G1H151J1□□A03□	X8G	50	150 ±5%	4.0 x 3.5	2.5	2.5	A2	DB	-
RHE5G1H151J1□□A03□	X8G	50	150 ±5%	4.0 x 3.5	2.5	5.0	K1	M1	-
RHE5G1H181J1□□A03□	X8G	50	180 ±5%	4.0 x 3.5	2.5	2.5	A2	DB	-
RHE5G1H181J1□□A03□	X8G	50	180 ±5%	4.0 x 3.5	2.5	5.0	K1	M1	-
RHE5G1H221J1□□A03□	X8G	50	220 ±5%	4.0 x 3.5	2.5	2.5	A2	DB	-
RHE5G1H221J1□□A03□	X8G	50	220 ±5%	4.0 x 3.5	2.5	5.0	K1	M1	-
RHE5G1H271J1□□A03□	X8G	50	270 ±5%	4.0 x 3.5	2.5	2.5	A2	DB	-
RHE5G1H271J1□□A03□	X8G	50	270 ±5%	4.0 x 3.5	2.5	5.0	K1	M1	-
RHE5G1H331J1□□A03□	X8G	50	330 ±5%	4.0 x 3.5	2.5	2.5	A2	DB	-
RHE5G1H331J1□□A03□	X8G	50	330 ±5%	4.0 x 3.5	2.5	5.0	K1	M1	-
RHE5G1H391J1□□A03□	X8G	50	390 ±5%	4.0 x 3.5	2.5	2.5	A2	DB	-
RHE5G1H391J1□□A03□	X8G	50	390 ±5%	4.0 x 3.5	2.5	5.0	K1	M1	-

Continued on the following page.

Continued from the preceding page.

Part Number	Temp. Char.	Rated Voltage (Vdc)	Capacitance (pF)	Dimensions LxW (mm)	Dimension T (mm)	Lead Space F (mm)	Lead Style Code Bulk	Lead Style Code Taping (1)	Lead Style Code Taping (2)
RHE5G1H471J1□□A03□	X8G	50	470 ±5%	4.0 x 3.5	2.5	2.5	A2	DB	-
RHE5G1H471J1□□A03□	X8G	50	470 ±5%	4.0 x 3.5	2.5	5.0	K1	M1	-
RHE5G1H561J1□□A03□	X8G	50	560 ±5%	4.0 x 3.5	2.5	2.5	A2	DB	-
RHE5G1H561J1□□A03□	X8G	50	560 ±5%	4.0 x 3.5	2.5	5.0	K1	M1	-
RHE5G1H681J1□□A03□	X8G	50	680 ±5%	4.0 x 3.5	2.5	2.5	A2	DB	-
RHE5G1H681J1□□A03□	X8G	50	680 ±5%	4.0 x 3.5	2.5	5.0	K1	M1	-
RHE5G1H821J1□□A03□	X8G	50	820 ±5%	4.0 x 3.5	2.5	2.5	A2	DB	-
RHE5G1H821J1□□A03□	X8G	50	820 ±5%	4.0 x 3.5	2.5	5.0	K1	M1	-
RHE5G1H102J1□□A03□	X8G	50	1000 ±5%	4.0 x 3.5	2.5	2.5	A2	DB	-
RHE5G1H102J1□□A03□	X8G	50	1000 ±5%	4.0 x 3.5	2.5	5.0	K1	M1	-
RHE5G1H122J1□□A03□	X8G	50	1200 ±5%	4.0 x 3.5	2.5	2.5	A2	DB	-
RHE5G1H122J1□□A03□	X8G	50	1200 ±5%	4.0 x 3.5	2.5	5.0	K1	M1	-
RHE5G1H152J1□□A03□	X8G	50	1500 ±5%	4.0 x 3.5	2.5	2.5	A2	DB	-
RHE5G1H152J1□□A03□	X8G	50	1500 ±5%	4.0 x 3.5	2.5	5.0	K1	M1	-
RHE5G2A101J1□□A03□	X8G	100	100 ±5%	4.0 x 3.5	2.5	2.5	A2	DB	-
RHE5G2A101J1□□A03□	X8G	100	100 ±5%	4.0 x 3.5	2.5	5.0	K1	M1	-
RHE5G2A121J1□□A03□	X8G	100	120 ±5%	4.0 x 3.5	2.5	2.5	A2	DB	-
RHE5G2A121J1□□A03□	X8G	100	120 ±5%	4.0 x 3.5	2.5	5.0	K1	M1	-
RHE5G2A151J1□□A03□	X8G	100	150 ±5%	4.0 x 3.5	2.5	2.5	A2	DB	-
RHE5G2A151J1□□A03□	X8G	100	150 ±5%	4.0 x 3.5	2.5	5.0	K1	M1	-
RHE5G2A181J1□□A03□	X8G	100	180 ±5%	4.0 x 3.5	2.5	2.5	A2	DB	-
RHE5G2A181J1□□A03□	X8G	100	180 ±5%	4.0 x 3.5	2.5	5.0	K1	M1	-
RHE5G2A221J1□□A03□	X8G	100	220 ±5%	4.0 x 3.5	2.5	2.5	A2	DB	-
RHE5G2A221J1□□A03□	X8G	100	220 ±5%	4.0 x 3.5	2.5	5.0	K1	M1	-
RHE5G2A271J1□□A03□	X8G	100	270 ±5%	4.0 x 3.5	2.5	2.5	A2	DB	-
RHE5G2A271J1□□A03□	X8G	100	270 ±5%	4.0 x 3.5	2.5	5.0	K1	M1	-
RHE5G2A331J1□□A03□	X8G	100	330 ±5%	4.0 x 3.5	2.5	2.5	A2	DB	-
RHE5G2A331J1□□A03□	X8G	100	330 ±5%	4.0 x 3.5	2.5	5.0	K1	M1	-
RHE5G2A391J1□□A03□	X8G	100	390 ±5%	4.0 x 3.5	2.5	2.5	A2	DB	-
RHE5G2A391J1□□A03□	X8G	100	390 ±5%	4.0 x 3.5	2.5	5.0	K1	M1	-
RHE5G2A471J1□□A03□	X8G	100	470 ±5%	4.0 x 3.5	2.5	2.5	A2	DB	-
RHE5G2A471J1□□A03□	X8G	100	470 ±5%	4.0 x 3.5	2.5	5.0	K1	M1	-
RHE5G2A561J1□□A03□	X8G	100	560 ±5%	4.0 x 3.5	2.5	2.5	A2	DB	-
RHE5G2A561J1□□A03□	X8G	100	560 ±5%	4.0 x 3.5	2.5	5.0	K1	M1	-
RHE5G2A681J1□□A03□	X8G	100	680 ±5%	4.0 x 3.5	2.5	2.5	A2	DB	-
RHE5G2A681J1□□A03□	X8G	100	680 ±5%	4.0 x 3.5	2.5	5.0	K1	M1	-
RHE5G2A821J1□□A03□	X8G	100	820 ±5%	4.0 x 3.5	2.5	2.5	A2	DB	-
RHE5G2A821J1□□A03□	X8G	100	820 ±5%	4.0 x 3.5	2.5	5.0	K1	M1	-
RHE5G2A102J1□□A03□	X8G	100	1000 ±5%	4.0 x 3.5	2.5	2.5	A2	DB	-
RHE5G2A102J1□□A03□	X8G	100	1000 ±5%	4.0 x 3.5	2.5	5.0	K1	M1	-

Two blank columns are filled with the lead style code. Please refer to the 3 columns on the right for the appropriate code.
The last blank column is filled with the packaging code. (B: bulk, A: ammo pack)

High Dielectric Constant Type, X8L Characteristics

Part Number	Temp. Char.	Rated Voltage (Vdc)	Capacitance	Dimensions LxW (mm)	Dimension T (mm)	Lead Space F (mm)	Lead Style Code Bulk	Lead Style Code Taping (1)	Lead Style Code Taping (2)
RHEL81H102K1□□A03□	X8L	50	1000pF ±10%	4.0 x 3.5	2.5	2.5	A2	DB	-
RHEL81H102K1□□A03□	X8L	50	1000pF ±10%	4.0 x 3.5	2.5	5.0	K1	M1	-
RHEL81H152K1□□A03□	X8L	50	1500pF ±10%	4.0 x 3.5	2.5	2.5	A2	DB	-
RHEL81H152K1□□A03□	X8L	50	1500pF ±10%	4.0 x 3.5	2.5	5.0	K1	M1	-
RHEL81H222K1□□A03□	X8L	50	2200pF ±10%	4.0 x 3.5	2.5	2.5	A2	DB	-
RHEL81H222K1□□A03□	X8L	50	2200pF ±10%	4.0 x 3.5	2.5	5.0	K1	M1	-
RHEL81H332K1□□A03□	X8L	50	3300pF ±10%	4.0 x 3.5	2.5	2.5	A2	DB	-
RHEL81H332K1□□A03□	X8L	50	3300pF ±10%	4.0 x 3.5	2.5	5.0	K1	M1	-
RHEL81H472K1□□A03□	X8L	50	4700pF ±10%	4.0 x 3.5	2.5	2.5	A2	DB	-

Continued on the following page.

Continued from the preceding page.

Part Number	Temp. Char.	Rated Voltage (Vdc)	Capacitance	Dimensions LxW (mm)	Dimension T (mm)	Lead Space F (mm)	Lead Style Code Bulk	Lead Style Code Taping (1)	Lead Style Code Taping (2)
RHEL81H472K1□□A03□	X8L	50	4700pF ±10%	4.0 x 3.5	2.5	5.0	K1	M1	-
RHEL81H682K1□□A03□	X8L	50	6800pF ±10%	4.0 x 3.5	2.5	2.5	A2	DB	-
RHEL81H682K1□□A03□	X8L	50	6800pF ±10%	4.0 x 3.5	2.5	5.0	K1	M1	-
RHEL81H103K1□□A03□	X8L	50	10000pF ±10%	4.0 x 3.5	2.5	2.5	A2	DB	-
RHEL81H103K1□□A03□	X8L	50	10000pF ±10%	4.0 x 3.5	2.5	5.0	K1	M1	-
RHEL81H153K1□□A03□	X8L	50	15000pF ±10%	4.0 x 3.5	2.5	2.5	A2	DB	-
RHEL81H153K1□□A03□	X8L	50	15000pF ±10%	4.0 x 3.5	2.5	5.0	K1	M1	-
RHEL81H223K1□□A03□	X8L	50	22000pF ±10%	4.0 x 3.5	2.5	2.5	A2	DB	-
RHEL81H223K1□□A03□	X8L	50	22000pF ±10%	4.0 x 3.5	2.5	5.0	K1	M1	-
RHEL81H333K1□□A03□	X8L	50	33000pF ±10%	4.0 x 3.5	3.15	2.5	A2	DB	-
RHEL81H333K1□□A03□	X8L	50	33000pF ±10%	4.0 x 3.5	3.15	5.0	K1	M1	-
RHEL81H473K1□□A03□	X8L	50	47000pF ±10%	4.0 x 3.5	3.15	2.5	A2	DB	-
RHEL81H473K1□□A03□	X8L	50	47000pF ±10%	4.0 x 3.5	3.15	5.0	K1	M1	-
RHEL81H683K1□□A03□	X8L	50	68000pF ±10%	4.0 x 3.5	3.15	2.5	A2	DB	-
RHEL81H683K1□□A03□	X8L	50	68000pF ±10%	4.0 x 3.5	3.15	5.0	K1	M1	-
RHEL81H104K1□□A03□	X8L	50	0.10μF ±10%	4.0 x 3.5	3.15	2.5	A2	DB	-
RHEL81H104K1□□A03□	X8L	50	0.10μF ±10%	4.0 x 3.5	3.15	5.0	K1	M1	-
RHDL81H154K2□□C03□	X8L	50	0.15μF ±10%	5.7 x 4.5	4.5	2.5	A2	DB	-
RHDL81H154K2□□C03□	X8L	50	0.15μF ±10%	5.7 x 4.5	4.5	5.0	K1	M1	-
RHDL81H224K2□□C03□	X8L	50	0.22μF ±10%	5.7 x 4.5	4.5	2.5	A2	DB	-
RHDL81H224K2□□C03□	X8L	50	0.22μF ±10%	5.7 x 4.5	4.5	5.0	K1	M1	-
RHDL81H334K2□□C03□	X8L	50	0.33μF ±10%	5.7 x 4.5	4.5	2.5	A2	DB	-
RHDL81H334K2□□C03□	X8L	50	0.33μF ±10%	5.7 x 4.5	4.5	5.0	K1	M1	-
RHDL81H474K2□□C03□	X8L	50	0.47μF ±10%	5.7 x 4.5	4.5	2.5	A2	DB	-
RHDL81H474K2□□C03□	X8L	50	0.47μF ±10%	5.7 x 4.5	4.5	5.0	K1	M1	-
RHDL81H684K2□□C03□	X8L	50	0.68μF ±10%	5.7 x 4.5	4.5	2.5	A2	DB	-
RHDL81H684K2□□C03□	X8L	50	0.68μF ±10%	5.7 x 4.5	4.5	5.0	K1	M1	-
RHDL81H105K2□□C03□	X8L	50	1.0μF ±10%	5.7 x 4.5	4.5	2.5	A2	DB	-
RHDL81H105K2□□C03□	X8L	50	1.0μF ±10%	5.7 x 4.5	4.5	5.0	K1	M1	-
RHDL81H155K2□□C03□	X8L	50	1.5μF ±10%	5.7 x 4.5	4.5	2.5	A2	DB	-
RHDL81H155K2□□C03□	X8L	50	1.5μF ±10%	5.7 x 4.5	4.5	5.0	K1	M1	-
RHDL81H225K3□□C03□	X8L	50	2.2μF ±10%	6.0 x 5.5	5.0	2.5	A2	DB	-
RHDL81H225K3□□C03□	X8L	50	2.2μF ±10%	6.0 x 5.5	5.0	5.0	K1	M1	-
RHDL81H335K3□□C03□	X8L	50	3.3μF ±10%	6.0 x 5.5	5.0	2.5	A2	DB	-
RHDL81H335K3□□C03□	X8L	50	3.3μF ±10%	6.0 x 5.5	5.0	5.0	K1	M1	-
RHDL81H475K3□□C03□	X8L	50	4.7μF ±10%	6.0 x 5.5	5.0	2.5	A2	DB	-
RHDL81H475K3□□C03□	X8L	50	4.7μF ±10%	6.0 x 5.5	5.0	5.0	K1	M1	-
RHDL81H106MW□□C03□	X8L	50	10μF ±20%	6.0 x 8.0	5.0	5.0	K1	M1	-
RHEL82A102K1□□A03□	X8L	100	1000pF ±10%	4.0 x 3.5	2.5	2.5	A2	DB	-
RHEL82A102K1□□A03□	X8L	100	1000pF ±10%	4.0 x 3.5	2.5	5.0	K1	M1	-
RHEL82A152K1□□A03□	X8L	100	1500pF ±10%	4.0 x 3.5	2.5	2.5	A2	DB	-
RHEL82A152K1□□A03□	X8L	100	1500pF ±10%	4.0 x 3.5	2.5	5.0	K1	M1	-
RHEL82A222K1□□A03□	X8L	100	2200pF ±10%	4.0 x 3.5	2.5	2.5	A2	DB	-
RHEL82A222K1□□A03□	X8L	100	2200pF ±10%	4.0 x 3.5	2.5	5.0	K1	M1	-
RHEL82A332K1□□A03□	X8L	100	3300pF ±10%	4.0 x 3.5	2.5	2.5	A2	DB	-
RHEL82A332K1□□A03□	X8L	100	3300pF ±10%	4.0 x 3.5	2.5	5.0	K1	M1	-
RHEL82A472K1□□A03□	X8L	100	4700pF ±10%	4.0 x 3.5	2.5	2.5	A2	DB	-
RHEL82A472K1□□A03□	X8L	100	4700pF ±10%	4.0 x 3.5	2.5	5.0	K1	M1	-
RHEL82A682K1□□A03□	X8L	100	6800pF ±10%	4.0 x 3.5	2.5	2.5	A2	DB	-
RHEL82A682K1□□A03□	X8L	100	6800pF ±10%	4.0 x 3.5	2.5	5.0	K1	M1	-
RHEL82A103K1□□A03□	X8L	100	10000pF ±10%	4.0 x 3.5	3.15	2.5	A2	DB	-
RHEL82A103K1□□A03□	X8L	100	10000pF ±10%	4.0 x 3.5	3.15	5.0	K1	M1	-
RHEL82A153K1□□A03□	X8L	100	15000pF ±10%	4.0 x 3.5	3.15	2.5	A2	DB	-
RHEL82A153K1□□A03□	X8L	100	15000pF ±10%	4.0 x 3.5	3.15	5.0	K1	M1	-
RHEL82A223K1□□A03□	X8L	100	22000pF ±10%	4.0 x 3.5	3.15	2.5	A2	DB	-
RHEL82A223K1□□A03□	X8L	100	22000pF ±10%	4.0 x 3.5	3.15	5.0	K1	M1	-
RHDL82A333K2□□C03□	X8L	100	33000pF ±10%	5.7 x 4.5	4.5	2.5	A2	DB	-

Continued on the following page.

Continued from the preceding page.

Part Number	Temp. Char.	Rated Voltage (Vdc)	Capacitance	Dimensions LxW (mm)	Dimension T (mm)	Lead Space F (mm)	Lead Style Code Bulk	Lead Style Code Taping (1)	Lead Style Code Taping (2)
RHDL82A333K2□□C03□	X8L	100	33000pF ±10%	5.7 x 4.5	4.5	5.0	K1	M1	-
RHDL82A473K2□□C03□	X8L	100	47000pF ±10%	5.7 x 4.5	4.5	2.5	A2	DB	-
RHDL82A473K2□□C03□	X8L	100	47000pF ±10%	5.7 x 4.5	4.5	5.0	K1	M1	-
RHDL82A683K2□□C03□	X8L	100	68000pF ±10%	5.7 x 4.5	4.5	2.5	A2	DB	-
RHDL82A683K2□□C03□	X8L	100	68000pF ±10%	5.7 x 4.5	4.5	5.0	K1	M1	-
RHDL82A104K2□□C03□	X8L	100	0.10µF ±10%	5.7 x 4.5	4.5	2.5	A2	DB	-
RHDL82A104K2□□C03□	X8L	100	0.10µF ±10%	5.7 x 4.5	4.5	5.0	K1	M1	-

Two blank columns are filled with the lead style code. Please refer to the 3 columns on the right for the appropriate code.
The last blank column is filled with the packaging code. (B: bulk, A: ammo pack)

Specifications and Test Methods

No.	Item		Specifications: Temperature Compensating Type (Char. X8G)	Specifications: High Dielectric Constant Type (Char. X8L)	Test Method
1	Operating Temperature Range		-55 to +150˚C		–
2	Appearance		No defects or abnormalities		Visual inspection
3	Dimension and Marking		See previous pages		Visual inspection, Vernier Caliper
4	Dielectric Strength	Between Terminals	No defects or abnormalities		The capacitor should not be damaged when DC voltage of 300% of the rated voltage (Temperature Compensating Type) or 250% of the rated voltage (High Dielectric Constant Type) is applied between the terminations for 1 to 5 sec. (Charge/Discharge current ≦ 50mA)
		Body Insulation	No defects or abnormalities		The capacitor is placed in a container with metal balls of 1mm diameter so that each terminal, short-circuit, is kept approximately 2mm from the balls as shown in the figure, and 250% of the rated DC voltage is impressed for 1 to 5 sec. between capacitor terminals and metal balls. (Charge/Discharge current ≦ 50mA) 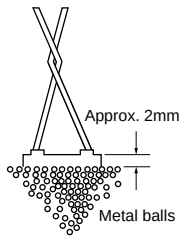
5	Insulation Resistance	Room Temperature	10,000MΩ or 500MΩ· μF min. (whichever is smaller)		The insulation resistance should be measured at 25±3°C with a DC voltage not exceeding the rated voltage at normal temperature and humidity and within 2 min. of charging. (Charge/Discharge current ≦ 50mA)
		High Temperature	100MΩ or 5MΩ· μF min. (whichever is smaller)		The insulation resistance should be measured at 150±3°C with a DC voltage not exceeding the rated voltage at normal temperature and humidity and within 2 min. of charging. (Charge/Discharge current ≦ 50mA)
6	Capacitance		Within the specified tolerance		The capacitance, Q/D.F. should be measured at 25˚C at the frequency and voltage shown in the table.
7	Q/Dissipation Factor (D.F.)		Q≧1,000	0.025 max.	
8	Capacitance Temperature Characteristics	Capacitance Change	Within the specified tolerance (Table A on last column)	Within ±15% (Temp. Range: -55 to +125°C) Within +15/-40% (Temp. Range: +125 to +150°C)	The capacitance change should be measured after 5 min. at each specified temperature stage.
		Temperature Coefficient	Within the specified tolerance (Table A on last column)		
		Capacitance Drift	Within ±0.2% or ±0.05pF (whichever is larger)		• Pretreatment for high dielectric constant type Perform a heat treatment at 150+0/-10°C for 1 hr., and then let sit at room temperature for 24±2 hrs.

Item \ Char.	X8G (1000pF and below)	X8G (more than 1000pF), X8L
Frequency	1±0.1MHz	1±0.1kHz
Voltage	AC0.5 to 5V (r.m.s.)	AC1±0.2V (r.m.s.)

Step	Temperature (˚C)
1	25±2
2	-55±3
3	25±2
4	150±3
5	25±2

Continued on the following page.

Specifications and Test Methods

Continued from the preceding page.

No.	Item		Specifications: Temperature Compensating Type (Char. X8G)	Specifications: High Dielectric Constant Type (Char. X8L)	Test Method
9	Terminal Strength	Tensile Strength	Termination not to be broken or loosened		As in the figure, fix the capacitor body, apply the force gradually to each lead in the radial direction of the capacitor until reaching 10N and then keep the force applied for 10±1 sec. 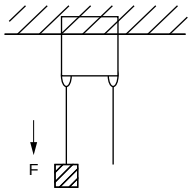
		Bending Strength	Termination not to be broken or loosened		Each lead wire should be subjected to a force of 2.5N and then bent 90° at the point of egress in one direction. Each wire is then returned to the original position and bent 90° in the opposite direction at the rate of one bend per 2 to 3 sec.
10	Vibration Resistance	Appearance	No defects or abnormalities		The capacitor should be firmly soldered to the supporting lead wire and vibrated at a frequency range of 10 to 2000Hz, 1.5mm in total amplitude, with about a 20 min. rate of vibration change from 10Hz to 2000Hz and back to 10Hz. Apply for a total of 6 hrs., 2 hrs. each in 3 mutually perpendicular directions.
		Capacitance	Within the specified tolerance		
		Q/D.F.	Q≧1,000	0.025 max.	
11	Solderability of Leads		Lead wire should be soldered with uniform coating on the axial direction over 3/4 of the circumferential direction.		The terminal of a capacitor is dipped into a solution of ethanol (JIS-K-8101) and rosin (JIS-K-5902) (25% rosin in weight proportion) and then into molten solder (JIS-Z-3282) for 2±0.5 sec. In both cases the depth of dipping is up to about 1.5 to 2mm from the terminal body. Temp. of solder: 245±5°C Lead Free Solder (Sn-3.0Ag-0.5Cu) 235±5°C H60A or H63A Eutectic Solder
12	Resistance to Soldering Heat	Appearance	No defects or abnormalities		The lead wire is immersed in the melted solder 1.5 to 2mm from the main body at 270±5°C for 3±0.5 sec. The specified items are measured after 24±2 hrs. • Pretreatment for high dielectric constant type Perform a heat treatment at 150+0/-10°C for 1 hr., and then let sit at room temperature for 24±2 hrs.
		Capacitance Change	Within ±2.5% or ±0.25pF (whichever is larger)	Within ±7.5%	
		Dielectric Strength (Between Terminals)	No defects		
13	Temperature Cycle	Appearance	No defects or abnormalities except color change of outer coating		Repeat 1000 cycles according to 4 heat treatments listed in the following table. Remove and set for 24±2 hrs. at room temperature, then measure. Step / Temperature (°C) / Time (min) 1 / -55±3 / 30±3 2 / Room Temp. / 3 max. 3 / 150±3 / 30±3 4 / Room Temp. / 3 max. • Pretreatment for high dielectric constant type Perform a heat treatment at 150+0/-10°C for 1 hr., and then let sit at room temperature for 24±2 hrs.
		Capacitance Change	Within ±5% or ±0.5pF (whichever is larger)	Within ±12.5%	
		Q/D.F.	Q≧350	0.05 max.	
		Insulation Resistance	1,000MΩ or 50MΩ · μF min. (whichever is smaller)		
		Dielectric Strength (Between Terminals)	No defects or abnormalities		
14	Humidity (Steady State)	Appearance	No defects or abnormalities		Set the capacitor at 85±2°C and relative humidity of 85 ±2% for 500 $^{+24}_{0}$ hrs. Remove and set for 24±2 hrs. at room temperature, then measure. • Pretreatment for high dielectric constant type Perform a heat treatment at 150+0/-10°C for 1 hr., and then let sit at room temperature for 24±2 hrs.
		Capacitance Change	Within ±5% or ±0.5pF (whichever is larger)	Within ±12.5%	
		Q/D.F.	Q≧350	0.05 max.	
		Insulation Resistance	1,000MΩ or 50MΩ · μF min. (whichever is smaller)		
15	Humidity Load	Appearance	No defects or abnormalities		Apply the rated voltage at 85±2°C and relative humidity of 85±2% for 500 $^{+24}_{0}$ hrs. Remove and set for 24±2 hrs. at room temperature, then measure. (Charge/Discharge current ≦ 50mA) • Pretreatment for high dielectric constant type Perform a heat treatment at 150+0/-10°C for 1 hr., and then let sit at room temperature for 24±2 hrs.
		Capacitance Change	Within ±5% or ±0.5pF (whichever is larger)	Within ±12.5%	
		Q/D.F.	Q≧200	0.05 max.	
		Insulation Resistance	500MΩ or 25MΩ · μF min. (whichever is smaller)		

Continued on the following page.

Specifications and Test Methods

Continued from the preceding page.

No.	Item		Specifications		Test Method
			Temperature Compensating Type (Char. X8G)	High Dielectric Constant Type (Char. X8L)	
16	High Temperature Load	Appearance	No defects or abnormalities except color change of outer coating		Apply a DC voltage of 150% of the rated voltage for 1000 $^{+48}_{0}$ hrs. at the maximum operating temperature. Remove and set for 24±2 hrs. at room temperature, then measure. (Charge/Discharge current ≦ 50mA) • Pretreatment for high dielectric constant type Apply test voltage for 1 hr., at test temperature. Remove and set for 24±2 hrs. at room temperature.
		Capacitance Change	Within ±3% or ±0.3pF (whichever is larger)	Within ±12.5%	
		Q/D.F.	Q≧350	0.04 max.	
		Insulation Resistance	1,000MΩ or 50MΩ · μF min. (whichever is smaller)		
17	Solvent Resistance	Appearance	No defects or abnormalities		The capacitor should be fully immersed, unagitated, in reagent at 20 to 25 ˚C for 30±5 sec. and then removed gently. Marking on the surface of the capacitor should immediately be visually examined. Reagent : • Isopropyl alcohol
		Marking	Legible		

Table A

Char.	Nominal Values (ppm/°C) *1	Capacitance Change from 25°C (%)					
		–55°C		–30°C		–10°C	
		Max.	Min.	Max.	Min.	Max.	Min.
X8G	0±30	0.58	–0.24	0.40	–0.17	0.25	–0.11

*1: Nominal values denote the temperature coefficient within a range of 25 to 150°C

Radial Lead Type Monolithic Ceramic Capacitors

muRata

RDE Series (For Commercial Use Only) (DC25V-DC630V)

■ Features

1. Small size and large capacitance
2. Low ESR characteristics for high frequency
3. Coated with epoxy resin whose flammability is equivalent to UL94V-0

■ Applications

General electronic equipment
(Do not use for automotive-related power train and safety equipment.)

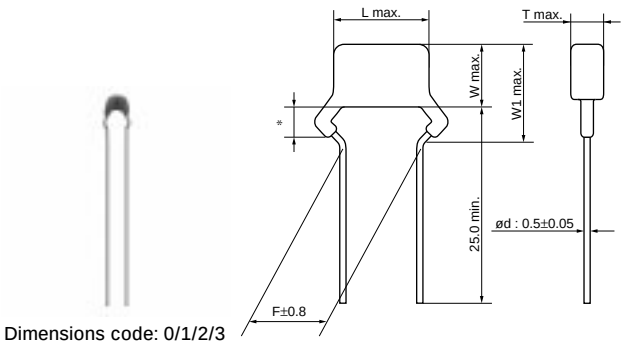

Dimensions code: 0/1/2/3
Lead style code: P1

∗ Coating extension does not exceed the end of the lead bend.
· Lead Wire : Solder Coated Copper Wire or Solder Coated CP Wire

(in mm)

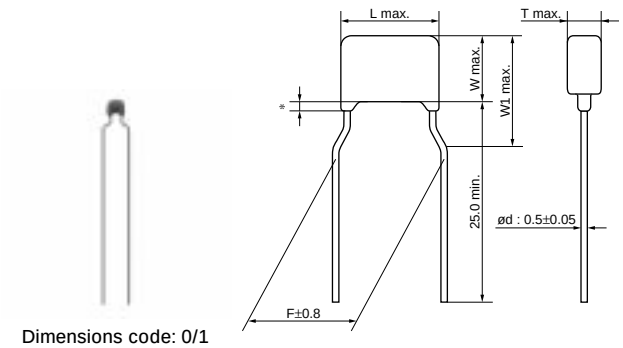

Dimensions code: 0/1
Lead style code: K1

∗ Coating extension does not exceed the end of the lead bend.
· Lead Wire : Solder Coated Copper Wire or Solder Coated CP Wire

(in mm)

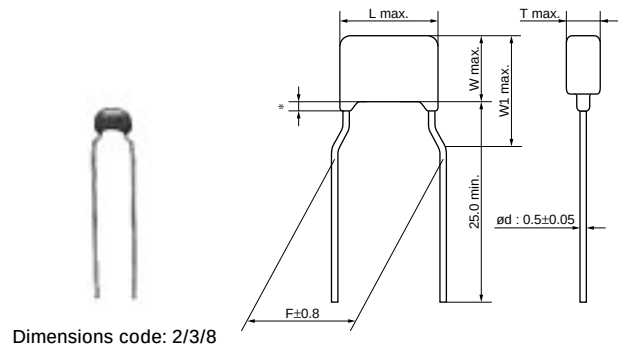

Dimensions code: 2/3/8
Lead style code: K1

∗ Coating extension does not exceed the end of the lead bend.
· Lead Wire : Solder Coated Copper Wire or Solder Coated CP Wire

(in mm)

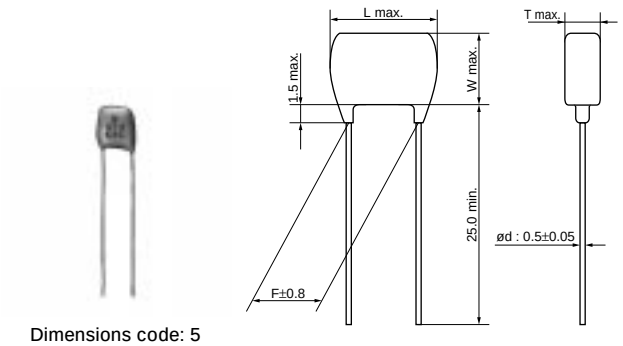

Dimensions code: 5
Lead style code: B1

· Lead Wire : Solder Coated Copper Wire or Solder Coated CP Wire

(in mm)

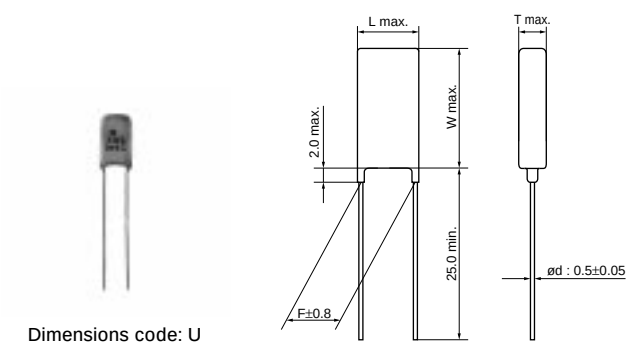

Dimensions code: U
Lead style code: B1

· Lead Wire : Solder Coated Copper Wire or Solder Coated CP Wire

(in mm)

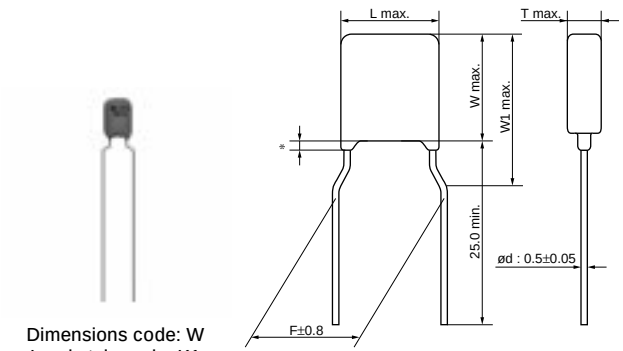

Dimensions code: W
Lead style code: K1

∗ Coating extension does not exceed the end of the lead bend.
· Lead Wire : Solder Coated Copper Wire or Solder Coated CP Wire

(in mm)

■ Dimensions

Dimensions and Lead Style Code	DC Rated Voltage	Dimensions (mm)					
		L	W	W1	T	F	d
0P1/0S1	25V/50V/100V	5.0	3.5	6.0	See the individual product specifications	2.5	0.5
0K1/0M1	25V/50V/100V	4.0	3.5	6.0		5.0	0.5
1P1/1S1	25V/50V/100V	5.0	3.5	5.0		2.5	0.5
1K1/1M1	25V/50V/100V	4.5	3.5	5.0		5.0	0.5
2P1/2S1	25V/50V/100V	5.5	4.0	6.0		2.5	0.5
2K1/2M1	25V/50V/100V	5.5	4.0	6.0		5.0	0.5
	250V/630V	5.0	3.5	5.0		5.0	0.5
3P1/3S1	25V/50V/100V	5.5	5.0	7.5		2.5	0.5
3K1/3M1	25V/50V/100V	5.5	5.0	7.5		5.0	0.5
	250V/630V	5.0	4.5	6.3		5.0	0.5
5B1/5E1	250V/630V	7.5	7.5*	-		5.0	0.5
8K1/8M1	250V/630V	7.5	5.5	8.0		5.0	0.5
UB1/UE1	250V/630V	7.7	12.5*	-		5.0	0.5
WK1/WM1	25V/100V	5.5	7.5	10.0		5.0	0.5

*DC630V: W+0.5mm

Continued on the following page. ↗

Continued from the preceding page.

■ Marking

Dimensions Code \ Type	Temperature Compensating Type	High Dielectric Constant Type									
Rated Voltage	DC50V, DC100V	DC25V		DC50V				DC100V		DC250V	DC630V
Temp. Char.	C0G	X7S	X7R	X7S	X7R	F	Y5V	X7S	X7R	X7R	
0	A 102J	224K	104K	–	224K	473	103Z	–	224K	–	–
1	–		–	–		–	–	–		–	–
2 Individual Specification Code A□□	–	Ⓜ 475 K2C	–	Ⓜ 475 K5C	Ⓜ 105 K5C	–	–	–	Ⓜ 105 K1C	103K	–
2 Individual Specification Code C□□										Ⓜ 153 K4C	Ⓜ 153 K7C
3, 8, W	–	Ⓜ 226 K2C	–	–	Ⓜ 335 K5C	–	–	Ⓜ 225 K1C	–	Ⓜ 104 K4C	Ⓜ 104 K7C
5, U	–	–	–	–	–	–	–	–	–	Ⓜ 474 K4C	Ⓜ 474 M7C

Temperature Characteristics	Marked with code (C0G char.: A, X7S/X7R char.: C, F/Y5V char.: F) A part is omitted (Please refer to the marking example.)
Nominal Capacitance	Under 100pF: Actual value 100pF and over: Marked with 3 figures
Capacitance Tolerance	Marked with code A part is omitted (Please refer to the marking example.)
Rated Voltage	Marked with code (DC25V: 2, DC50V: 5, DC100V: 1, DC250V: 4, DC630V: 7) Lower horizontal line for F char. A part is omitted (Please refer to the marking example.)
Manufacturer's Identification	Marked with Ⓜ A part is omitted (Please refer to the marking example.)

Temperature Compensating Type, C0G Characteristics

Part Number	Temp. Char.	Rated Voltage (Vdc)	Capacitance (pF)	Dimensions LxW (mm)	Dimension T (mm)	Lead Space F (mm)	Lead Style Code Bulk	Lead Style Code Taping (1)	Lead Style Code Taping (2)
RDE5C1H100J0□□C03□	C0G	50	10 ±5%	4.0 x 3.5	2.5	5.0	K1	M1	-
RDE5C1H100J0□□C03□	C0G	50	10 ±5%	5.0 x 3.5	2.5	2.5	P1	S1	-
RDE5C1H120J0□□C03□	C0G	50	12 ±5%	4.0 x 3.5	2.5	5.0	K1	M1	-
RDE5C1H120J0□□C03□	C0G	50	12 ±5%	5.0 x 3.5	2.5	2.5	P1	S1	-
RDE5C1H150J0□□C03□	C0G	50	15 ±5%	4.0 x 3.5	2.5	5.0	K1	M1	-
RDE5C1H150J0□□C03□	C0G	50	15 ±5%	5.0 x 3.5	2.5	2.5	P1	S1	-
RDE5C1H180J0□□C03□	C0G	50	18 ±5%	4.0 x 3.5	2.5	5.0	K1	M1	-
RDE5C1H180J0□□C03□	C0G	50	18 ±5%	5.0 x 3.5	2.5	2.5	P1	S1	-
RDE5C1H220J0□□C03□	C0G	50	22 ±5%	4.0 x 3.5	2.5	5.0	K1	M1	-
RDE5C1H220J0□□C03□	C0G	50	22 ±5%	5.0 x 3.5	2.5	2.5	P1	S1	-
RDE5C1H270J0□□C03□	C0G	50	27 ±5%	4.0 x 3.5	2.5	5.0	K1	M1	-
RDE5C1H270J0□□C03□	C0G	50	27 ±5%	5.0 x 3.5	2.5	2.5	P1	S1	-
RDE5C1H330J0□□C03□	C0G	50	33 ±5%	4.0 x 3.5	2.5	5.0	K1	M1	-
RDE5C1H330J0□□C03□	C0G	50	33 ±5%	5.0 x 3.5	2.5	2.5	P1	S1	-
RDE5C1H390J0□□C03□	C0G	50	39 ±5%	4.0 x 3.5	2.5	5.0	K1	M1	-
RDE5C1H390J0□□C03□	C0G	50	39 ±5%	5.0 x 3.5	2.5	2.5	P1	S1	-
RDE5C1H470J0□□C03□	C0G	50	47 ±5%	4.0 x 3.5	2.5	5.0	K1	M1	-
RDE5C1H470J0□□C03□	C0G	50	47 ±5%	5.0 x 3.5	2.5	2.5	P1	S1	-
RDE5C1H560J0□□C03□	C0G	50	56 ±5%	4.0 x 3.5	2.5	5.0	K1	M1	-
RDE5C1H560J0□□C03□	C0G	50	56 ±5%	5.0 x 3.5	2.5	2.5	P1	S1	-

Continued on the following page.

Continued from the preceding page.

Part Number	Temp. Char.	Rated Voltage (Vdc)	Capacitance (pF)	Dimensions LxW (mm)	Dimension T (mm)	Lead Space F (mm)	Lead Style Code Bulk	Lead Style Code Taping (1)	Lead Style Code Taping (2)
RDE5C1H680J0□□C03□	C0G	50	68 ±5%	4.0 x 3.5	2.5	5.0	K1	M1	-
RDE5C1H680J0□□C03□	C0G	50	68 ±5%	5.0 x 3.5	2.5	2.5	P1	S1	-
RDE5C1H820J0□□C03□	C0G	50	82 ±5%	4.0 x 3.5	2.5	5.0	K1	M1	-
RDE5C1H820J0□□C03□	C0G	50	82 ±5%	5.0 x 3.5	2.5	2.5	P1	S1	-
RDE5C1H101J0□□C03□	C0G	50	100 ±5%	4.0 x 3.5	2.5	5.0	K1	M1	-
RDE5C1H101J0□□C03□	C0G	50	100 ±5%	5.0 x 3.5	2.5	2.5	P1	S1	-
RDE5C1H121J0□□C03□	C0G	50	120 ±5%	4.0 x 3.5	2.5	5.0	K1	M1	-
RDE5C1H121J0□□C03□	C0G	50	120 ±5%	5.0 x 3.5	2.5	2.5	P1	S1	-
RDE5C1H151J0□□C03□	C0G	50	150 ±5%	4.0 x 3.5	2.5	5.0	K1	M1	-
RDE5C1H151J0□□C03□	C0G	50	150 ±5%	5.0 x 3.5	2.5	2.5	P1	S1	-
RDE5C1H181J0□□C03□	C0G	50	180 ±5%	4.0 x 3.5	2.5	5.0	K1	M1	-
RDE5C1H181J0□□C03□	C0G	50	180 ±5%	5.0 x 3.5	2.5	2.5	P1	S1	-
RDE5C1H221J0□□C03□	C0G	50	220 ±5%	4.0 x 3.5	2.5	5.0	K1	M1	-
RDE5C1H221J0□□C03□	C0G	50	220 ±5%	5.0 x 3.5	2.5	2.5	P1	S1	-
RDE5C1H271J0□□C03□	C0G	50	270 ±5%	4.0 x 3.5	2.5	5.0	K1	M1	-
RDE5C1H271J0□□C03□	C0G	50	270 ±5%	5.0 x 3.5	2.5	2.5	P1	S1	-
RDE5C1H331J0□□C03□	C0G	50	330 ±5%	4.0 x 3.5	2.5	5.0	K1	M1	-
RDE5C1H331J0□□C03□	C0G	50	330 ±5%	5.0 x 3.5	2.5	2.5	P1	S1	-
RDE5C1H391J0□□C03□	C0G	50	390 ±5%	4.0 x 3.5	2.5	5.0	K1	M1	-
RDE5C1H391J0□□C03□	C0G	50	390 ±5%	5.0 x 3.5	2.5	2.5	P1	S1	-
RDE5C1H471J0□□C03□	C0G	50	470 ±5%	4.0 x 3.5	2.5	5.0	K1	M1	-
RDE5C1H471J0□□C03□	C0G	50	470 ±5%	5.0 x 3.5	2.5	2.5	P1	S1	-
RDE5C1H561J0□□C03□	C0G	50	560 ±5%	4.0 x 3.5	2.5	5.0	K1	M1	-
RDE5C1H561J0□□C03□	C0G	50	560 ±5%	5.0 x 3.5	2.5	2.5	P1	S1	-
RDE5C1H681J0□□C03□	C0G	50	680 ±5%	4.0 x 3.5	2.5	5.0	K1	M1	-
RDE5C1H681J0□□C03□	C0G	50	680 ±5%	5.0 x 3.5	2.5	2.5	P1	S1	-
RDE5C1H821J0□□C03□	C0G	50	820 ±5%	4.0 x 3.5	2.5	5.0	K1	M1	-
RDE5C1H821J0□□C03□	C0G	50	820 ±5%	5.0 x 3.5	2.5	2.5	P1	S1	-
RDE5C1H102J0□□C03□	C0G	50	1000 ±5%	4.0 x 3.5	2.5	5.0	K1	M1	-
RDE5C1H102J0□□C03□	C0G	50	1000 ±5%	5.0 x 3.5	2.5	2.5	P1	S1	-
RDE5C2A100J0□□C03□	C0G	100	10 ±5%	4.0 x 3.5	2.5	5.0	K1	M1	-
RDE5C2A100J0□□C03□	C0G	100	10 ±5%	5.0 x 3.5	2.5	2.5	P1	S1	-
RDE5C2A120J0□□C03□	C0G	100	12 ±5%	4.0 x 3.5	2.5	5.0	K1	M1	-
RDE5C2A120J0□□C03□	C0G	100	12 ±5%	5.0 x 3.5	2.5	2.5	P1	S1	-
RDE5C2A150J0□□C03□	C0G	100	15 ±5%	4.0 x 3.5	2.5	5.0	K1	M1	-
RDE5C2A150J0□□C03□	C0G	100	15 ±5%	5.0 x 3.5	2.5	2.5	P1	S1	-
RDE5C2A180J0□□C03□	C0G	100	18 ±5%	4.0 x 3.5	2.5	5.0	K1	M1	-
RDE5C2A180J0□□C03□	C0G	100	18 ±5%	5.0 x 3.5	2.5	2.5	P1	S1	-
RDE5C2A220J0□□C03□	C0G	100	22 ±5%	4.0 x 3.5	2.5	5.0	K1	M1	-
RDE5C2A220J0□□C03□	C0G	100	22 ±5%	5.0 x 3.5	2.5	2.5	P1	S1	-
RDE5C2A270J0□□C03□	C0G	100	27 ±5%	4.0 x 3.5	2.5	5.0	K1	M1	-
RDE5C2A270J0□□C03□	C0G	100	27 ±5%	5.0 x 3.5	2.5	2.5	P1	S1	-
RDE5C2A330J0□□C03□	C0G	100	33 ±5%	4.0 x 3.5	2.5	5.0	K1	M1	-
RDE5C2A330J0□□C03□	C0G	100	33 ±5%	5.0 x 3.5	2.5	2.5	P1	S1	-
RDE5C2A390J0□□C03□	C0G	100	39 ±5%	4.0 x 3.5	2.5	5.0	K1	M1	-
RDE5C2A390J0□□C03□	C0G	100	39 ±5%	5.0 x 3.5	2.5	2.5	P1	S1	-
RDE5C2A470J0□□C03□	C0G	100	47 ±5%	4.0 x 3.5	2.5	5.0	K1	M1	-
RDE5C2A470J0□□C03□	C0G	100	47 ±5%	5.0 x 3.5	2.5	2.5	P1	S1	-
RDE5C2A560J0□□C03□	C0G	100	56 ±5%	4.0 x 3.5	2.5	5.0	K1	M1	-
RDE5C2A560J0□□C03□	C0G	100	56 ±5%	5.0 x 3.5	2.5	2.5	P1	S1	-
RDE5C2A680J0□□C03□	C0G	100	68 ±5%	4.0 x 3.5	2.5	5.0	K1	M1	-
RDE5C2A680J0□□C03□	C0G	100	68 ±5%	5.0 x 3.5	2.5	2.5	P1	S1	-
RDE5C2A820J0□□C03□	C0G	100	82 ±5%	4.0 x 3.5	2.5	5.0	K1	M1	-
RDE5C2A820J0□□C03□	C0G	100	82 ±5%	5.0 x 3.5	2.5	2.5	P1	S1	-
RDE5C2A101J0□□C03□	C0G	100	100 ±5%	4.0 x 3.5	2.5	5.0	K1	M1	-
RDE5C2A101J0□□C03□	C0G	100	100 ±5%	5.0 x 3.5	2.5	2.5	P1	S1	-
RDE5C2A121J0□□C03□	C0G	100	120 ±5%	4.0 x 3.5	2.5	5.0	K1	M1	-

Continued on the following page.

Continued from the preceding page.

Part Number	Temp. Char.	Rated Voltage (Vdc)	Capacitance (pF)	Dimensions LxW (mm)	Dimension T (mm)	Lead Space F (mm)	Lead Style Code Bulk	Lead Style Code Taping (1)	Lead Style Code Taping (2)
RDE5C2A121J0□□C03□	C0G	100	120 ±5%	5.0 x 3.5	2.5	2.5	P1	S1	-
RDE5C2A151J0□□C03□	C0G	100	150 ±5%	4.0 x 3.5	2.5	5.0	K1	M1	-
RDE5C2A151J0□□C03□	C0G	100	150 ±5%	5.0 x 3.5	2.5	2.5	P1	S1	-
RDE5C2A181J0□□C03□	C0G	100	180 ±5%	4.0 x 3.5	2.5	5.0	K1	M1	-
RDE5C2A181J0□□C03□	C0G	100	180 ±5%	5.0 x 3.5	2.5	2.5	P1	S1	-
RDE5C2A221J0□□C03□	C0G	100	220 ±5%	4.0 x 3.5	2.5	5.0	K1	M1	-
RDE5C2A221J0□□C03□	C0G	100	220 ±5%	5.0 x 3.5	2.5	2.5	P1	S1	-
RDE5C2A271J0□□C03□	C0G	100	270 ±5%	4.0 x 3.5	2.5	5.0	K1	M1	-
RDE5C2A271J0□□C03□	C0G	100	270 ±5%	5.0 x 3.5	2.5	2.5	P1	S1	-
RDE5C2A331J0□□C03□	C0G	100	330 ±5%	4.0 x 3.5	2.5	5.0	K1	M1	-
RDE5C2A331J0□□C03□	C0G	100	330 ±5%	5.0 x 3.5	2.5	2.5	P1	S1	-
RDE5C2A391J0□□C03□	C0G	100	390 ±5%	4.0 x 3.5	2.5	5.0	K1	M1	-
RDE5C2A391J0□□C03□	C0G	100	390 ±5%	5.0 x 3.5	2.5	2.5	P1	S1	-
RDE5C2A471J0□□C03□	C0G	100	470 ±5%	4.0 x 3.5	2.5	5.0	K1	M1	-
RDE5C2A471J0□□C03□	C0G	100	470 ±5%	5.0 x 3.5	2.5	2.5	P1	S1	-
RDE5C2A561J0□□C03□	C0G	100	560 ±5%	4.0 x 3.5	2.5	5.0	K1	M1	-
RDE5C2A561J0□□C03□	C0G	100	560 ±5%	5.0 x 3.5	2.5	2.5	P1	S1	-
RDE5C2A681J0□□C03□	C0G	100	680 ±5%	4.0 x 3.5	2.5	5.0	K1	M1	-
RDE5C2A681J0□□C03□	C0G	100	680 ±5%	5.0 x 3.5	2.5	2.5	P1	S1	-
RDE5C2A821J0□□C03□	C0G	100	820 ±5%	4.0 x 3.5	2.5	5.0	K1	M1	-
RDE5C2A821J0□□C03□	C0G	100	820 ±5%	5.0 x 3.5	2.5	2.5	P1	S1	-
RDE5C2A102J0□□C03□	C0G	100	1000 ±5%	4.0 x 3.5	2.5	5.0	K1	M1	-
RDE5C2A102J0□□C03□	C0G	100	1000 ±5%	5.0 x 3.5	2.5	2.5	P1	S1	-

Two blank columns are filled with the lead style code. Please refer to the 3 columns on the right for the appropriate code.
The last blank column is filled with the packaging code. (B: bulk, A: ammo pack)

High Dielectric Constant Type, X7R/X7S Characteristics

Part Number	Temp. Char.	Rated Voltage (Vdc)	Capacitance	Dimensions LxW (mm)	Dimension T (mm)	Lead Space F (mm)	Lead Style Code Bulk	Lead Style Code Taping (1)	Lead Style Code Taping (2)
RDER71E104K0□□C03□	X7R	25	0.10μF ±10%	4.0 x 3.5	2.5	5.0	K1	M1	-
RDER71E104K0□□C03□	X7R	25	0.10μF ±10%	5.0 x 3.5	2.5	2.5	P1	S1	-
RDEC71E224K0□□C03□	X7S	25	0.22μF ±10%	4.0 x 3.5	2.5	5.0	K1	M1	-
RDEC71E224K0□□C03□	X7S	25	0.22μF ±10%	5.0 x 3.5	2.5	2.5	P1	S1	-
RDEC71E474K0□□C03□	X7S	25	0.47μF ±10%	4.0 x 3.5	2.5	5.0	K1	M1	-
RDEC71E474K0□□C03□	X7S	25	0.47μF ±10%	5.0 x 3.5	2.5	2.5	P1	S1	-
RDEC71E105K0□□C03□	X7S	25	1.0μF ±10%	4.0 x 3.5	2.5	5.0	K1	M1	-
RDEC71E105K0□□C03□	X7S	25	1.0μF ±10%	5.0 x 3.5	2.5	2.5	P1	S1	-
RDEC71E225K1□□C03□	X7S	25	2.2μF ±10%	4.5 x 3.5	3.15	5.0	K1	M1	-
RDEC71E225K1□□C03□	X7S	25	2.2μF ±10%	5.0 x 3.5	3.15	2.5	P1	S1	-
RDEC71E475K2□□C03□	X7S	25	4.7μF ±10%	5.5 x 4.0	3.15	2.5	P1	S1	-
RDEC71E475K2□□C03□	X7S	25	4.7μF ±10%	5.5 x 4.0	3.15	5.0	K1	M1	-
RDEC71E106K2□□C03□	X7S	25	10.0μF ±10%	5.5 x 4.0	3.15	2.5	P1	S1	-
RDEC71E106K2□□C03□	X7S	25	10.0μF ±10%	5.5 x 4.0	3.15	5.0	K1	M1	-
RDEC71E226K3□□C03□	X7S	25	22.0μF ±10%	5.5 x 5.0	4.0	2.5	P1	S1	-
RDEC71E226K3□□C03□	X7S	25	22.0μF ±10%	5.5 x 5.0	4.0	5.0	K1	M1	-
RDEC71E476MW□□C03□	X7S	25	47.0μF ±20%	5.5 x 7.5	4.0	5.0	K1	M1	-
RDER71H221K0□□C03□	X7R	50	220pF ±10%	4.0 x 3.5	2.5	5.0	K1	M1	-
RDER71H221K0□□C03□	X7R	50	220pF ±10%	5.0 x 3.5	2.5	2.5	P1	S1	-
RDER71H331K0□□C03□	X7R	50	330pF ±10%	4.0 x 3.5	2.5	5.0	K1	M1	-
RDER71H331K0□□C03□	X7R	50	330pF ±10%	5.0 x 3.5	2.5	2.5	P1	S1	-
RDER71H471K0□□C03□	X7R	50	470pF ±10%	4.0 x 3.5	2.5	5.0	K1	M1	-
RDER71H471K0□□C03□	X7R	50	470pF ±10%	5.0 x 3.5	2.5	2.5	P1	S1	-
RDER71H681K0□□C03□	X7R	50	680pF ±10%	4.0 x 3.5	2.5	5.0	K1	M1	-
RDER71H681K0□□C03□	X7R	50	680pF ±10%	5.0 x 3.5	2.5	2.5	P1	S1	-
RDER71H102K0□□C03□	X7R	50	1000pF ±10%	4.0 x 3.5	2.5	5.0	K1	M1	-

Continued on the following page.

Continued from the preceding page.

Part Number	Temp. Char.	Rated Voltage (Vdc)	Capacitance	Dimensions LxW (mm)	Dimension T (mm)	Lead Space F (mm)	Lead Style Code Bulk	Lead Style Code Taping (1)	Lead Style Code Taping (2)
RDER71H102K0□□C03□	X7R	50	1000pF ±10%	5.0 x 3.5	2.5	2.5	P1	S1	-
RDER71H152K0□□C03□	X7R	50	1500pF ±10%	4.0 x 3.5	2.5	5.0	K1	M1	-
RDER71H152K0□□C03□	X7R	50	1500pF ±10%	5.0 x 3.5	2.5	2.5	P1	S1	-
RDER71H222K0□□C03□	X7R	50	2200pF ±10%	4.0 x 3.5	2.5	5.0	K1	M1	-
RDER71H222K0□□C03□	X7R	50	2200pF ±10%	5.0 x 3.5	2.5	2.5	P1	S1	-
RDER71H332K0□□C03□	X7R	50	3300pF ±10%	4.0 x 3.5	2.5	5.0	K1	M1	-
RDER71H332K0□□C03□	X7R	50	3300pF ±10%	5.0 x 3.5	2.5	2.5	P1	S1	-
RDER71H472K0□□C03□	X7R	50	4700pF ±10%	4.0 x 3.5	2.5	5.0	K1	M1	-
RDER71H472K0□□C03□	X7R	50	4700pF ±10%	5.0 x 3.5	2.5	2.5	P1	S1	-
RDER71H682K0□□C03□	X7R	50	6800pF ±10%	4.0 x 3.5	2.5	5.0	K1	M1	-
RDER71H682K0□□C03□	X7R	50	6800pF ±10%	5.0 x 3.5	2.5	2.5	P1	S1	-
RDER71H103K0□□C03□	X7R	50	10000pF ±10%	4.0 x 3.5	2.5	5.0	K1	M1	-
RDER71H103K0□□C03□	X7R	50	10000pF ±10%	5.0 x 3.5	2.5	2.5	P1	S1	-
RDER71H153K0□□C03□	X7R	50	15000pF ±10%	4.0 x 3.5	2.5	5.0	K1	M1	-
RDER71H153K0□□C03□	X7R	50	15000pF ±10%	5.0 x 3.5	2.5	2.5	P1	S1	-
RDER71H223K0□□C03□	X7R	50	22000pF ±10%	4.0 x 3.5	2.5	5.0	K1	M1	-
RDER71H223K0□□C03□	X7R	50	22000pF ±10%	5.0 x 3.5	2.5	2.5	P1	S1	-
RDER71H333K0□□C03□	X7R	50	33000pF ±10%	4.0 x 3.5	2.5	5.0	K1	M1	-
RDER71H333K0□□C03□	X7R	50	33000pF ±10%	5.0 x 3.5	2.5	2.5	P1	S1	-
RDER71H473K0□□C03□	X7R	50	47000pF ±10%	4.0 x 3.5	2.5	5.0	K1	M1	-
RDER71H473K0□□C03□	X7R	50	47000pF ±10%	5.0 x 3.5	2.5	2.5	P1	S1	-
RDER71H683K0□□C03□	X7R	50	68000pF ±10%	4.0 x 3.5	2.5	5.0	K1	M1	-
RDER71H683K0□□C03□	X7R	50	68000pF ±10%	5.0 x 3.5	2.5	2.5	P1	S1	-
RDER71H104K0□□C03□	X7R	50	0.10μF ±10%	4.0 x 3.5	2.5	5.0	K1	M1	-
RDER71H104K0□□C03□	X7R	50	0.10μF ±10%	5.0 x 3.5	2.5	2.5	P1	S1	-
RDER71H154K1□□C03□	X7R	50	0.15μF ±10%	4.5 x 3.5	3.15	5.0	K1	M1	-
RDER71H154K1□□C03□	X7R	50	0.15μF ±10%	5.0 x 3.5	3.15	2.5	P1	S1	-
RDER71H224K1□□C03□	X7R	50	0.22μF ±10%	4.5 x 3.5	3.15	5.0	K1	M1	-
RDER71H224K1□□C03□	X7R	50	0.22μF ±10%	5.0 x 3.5	3.15	2.5	P1	S1	-
RDER71H334K1□□C03□	X7R	50	0.33μF ±10%	4.5 x 3.5	3.15	5.0	K1	M1	-
RDER71H334K1□□C03□	X7R	50	0.33μF ±10%	5.0 x 3.5	3.15	2.5	P1	S1	-
RDER71H474K1□□C03□	X7R	50	0.47μF ±10%	4.5 x 3.5	3.15	5.0	K1	M1	-
RDER71H474K1□□C03□	X7R	50	0.47μF ±10%	5.0 x 3.5	3.15	2.5	P1	S1	-
RDER71H684K2□□C03□	X7R	50	0.68μF ±10%	5.5 x 4.0	3.15	2.5	P1	S1	-
RDER71H684K2□□C03□	X7R	50	0.68μF ±10%	5.5 x 4.0	3.15	5.0	K1	M1	-
RDER71H105K2□□C03□	X7R	50	1.0μF ±10%	5.5 x 4.0	3.15	2.5	P1	S1	-
RDER71H105K2□□C03□	X7R	50	1.0μF ±10%	5.5 x 4.0	3.15	5.0	K1	M1	-
RDER71H155K2□□C03□	X7R	50	1.5μF ±10%	5.5 x 4.0	3.15	2.5	P1	S1	-
RDER71H155K2□□C03□	X7R	50	1.5μF ±10%	5.5 x 4.0	3.15	5.0	K1	M1	-
RDER71H225K2□□C03□	X7R	50	2.2μF ±10%	5.5 x 4.0	3.15	2.5	P1	S1	-
RDER71H225K2□□C03□	X7R	50	2.2μF ±10%	5.5 x 4.0	3.15	5.0	K1	M1	-
RDER71H335K3□□C03□	X7R	50	3.3μF ±10%	5.5 x 5.0	4.0	2.5	P1	S1	-
RDER71H335K3□□C03□	X7R	50	3.3μF ±10%	5.5 x 5.0	4.0	5.0	K1	M1	-
RDEC71H475K2□□C03□	X7S	50	4.7μF ±10%	5.5 x 4.0	3.15	2.5	P1	S1	-
RDEC71H475K2□□C03□	X7S	50	4.7μF ±10%	5.5 x 4.0	3.15	5.0	K1	M1	-
RDER72A102K0□□C03□	X7R	100	1000pF ±10%	4.0 x 3.5	2.5	5.0	K1	M1	-
RDER72A102K0□□C03□	X7R	100	1000pF ±10%	5.0 x 3.5	2.5	2.5	P1	S1	-
RDER72A152K0□□C03□	X7R	100	1500pF ±10%	4.0 x 3.5	2.5	5.0	K1	M1	-
RDER72A152K0□□C03□	X7R	100	1500pF ±10%	5.0 x 3.5	2.5	2.5	P1	S1	-
RDER72A222K0□□C03□	X7R	100	2200pF ±10%	4.0 x 3.5	2.5	5.0	K1	M1	-
RDER72A222K0□□C03□	X7R	100	2200pF ±10%	5.0 x 3.5	2.5	2.5	P1	S1	-
RDER72A332K0□□C03□	X7R	100	3300pF ±10%	4.0 x 3.5	2.5	5.0	K1	M1	-
RDER72A332K0□□C03□	X7R	100	3300pF ±10%	5.0 x 3.5	2.5	2.5	P1	S1	-
RDER72A472K0□□C03□	X7R	100	4700pF ±10%	4.0 x 3.5	2.5	5.0	K1	M1	-
RDER72A472K0□□C03□	X7R	100	4700pF ±10%	5.0 x 3.5	2.5	2.5	P1	S1	-
RDER72A682K0□□C03□	X7R	100	6800pF ±10%	4.0 x 3.5	2.5	5.0	K1	M1	-
RDER72A682K0□□C03□	X7R	100	6800pF ±10%	5.0 x 3.5	2.5	2.5	P1	S1	-

Continued on the following page.

Continued from the preceding page.

Part Number	Temp. Char.	Rated Voltage (Vdc)	Capacitance	Dimensions LxW (mm)	Dimension T (mm)	Lead Space F (mm)	Lead Style Code Bulk	Lead Style Code Taping (1)	Lead Style Code Taping (2)
RDER72A103K0□□C03□	X7R	100	10000pF ±10%	4.0 x 3.5	2.5	5.0	K1	M1	-
RDER72A103K0□□C03□	X7R	100	10000pF ±10%	5.0 x 3.5	2.5	2.5	P1	S1	-
RDER72A153K0□□C03□	X7R	100	15000pF ±10%	4.0 x 3.5	2.5	5.0	K1	M1	-
RDER72A153K0□□C03□	X7R	100	15000pF ±10%	5.0 x 3.5	2.5	2.5	P1	S1	-
RDER72A223K0□□C03□	X7R	100	22000pF ±10%	4.0 x 3.5	2.5	5.0	K1	M1	-
RDER72A223K0□□C03□	X7R	100	22000pF ±10%	5.0 x 3.5	2.5	2.5	P1	S1	-
RDER72A333K1□□C03□	X7R	100	33000pF ±10%	4.5 x 3.5	3.15	5.0	K1	M1	-
RDER72A333K1□□C03□	X7R	100	33000pF ±10%	5.0 x 3.5	3.15	2.5	P1	S1	-
RDER72A473K1□□C03□	X7R	100	47000pF ±10%	4.5 x 3.5	3.15	5.0	K1	M1	-
RDER72A473K1□□C03□	X7R	100	47000pF ±10%	5.0 x 3.5	3.15	2.5	P1	S1	-
RDER72A683K1□□C03□	X7R	100	68000pF ±10%	4.5 x 3.5	3.15	5.0	K1	M1	-
RDER72A683K1□□C03□	X7R	100	68000pF ±10%	5.0 x 3.5	3.15	2.5	P1	S1	-
RDER72A104K1□□C03□	X7R	100	0.10μF ±10%	4.5 x 3.5	3.15	5.0	K1	M1	-
RDER72A104K1□□C03□	X7R	100	0.10μF ±10%	5.0 x 3.5	3.15	2.5	P1	S1	-
RDER72A154K2□□C03□	X7R	100	0.15μF ±10%	5.5 x 4.0	3.15	2.5	P1	S1	-
RDER72A154K2□□C03□	X7R	100	0.15μF ±10%	5.5 x 4.0	3.15	5.0	K1	M1	-
RDER72A224K1□□C03□	X7R	100	0.22μF ±10%	4.5 x 3.5	3.15	5.0	K1	M1	-
RDER72A224K1□□C03□	X7R	100	0.22μF ±10%	5.0 x 3.5	3.15	2.5	P1	S1	-
RDER72A334K1□□C03□	X7R	100	0.33μF ±10%	4.5 x 3.5	3.15	5.0	K1	M1	-
RDER72A334K1□□C03□	X7R	100	0.33μF ±10%	5.0 x 3.5	3.15	2.5	P1	S1	-
RDER72A474K1□□C03□	X7R	100	0.47μF ±10%	4.5 x 3.5	3.15	5.0	K1	M1	-
RDER72A474K1□□C03□	X7R	100	0.47μF ±10%	5.0 x 3.5	3.15	2.5	P1	S1	-
RDER72A684K2□□C03□	X7R	100	0.68μF ±10%	5.5 x 4.0	3.15	2.5	P1	S1	-
RDER72A684K2□□C03□	X7R	100	0.68μF ±10%	5.5 x 4.0	3.15	5.0	K1	M1	-
RDER72A105K2□□C03□	X7R	100	1.0μF ±10%	5.5 x 4.0	3.15	2.5	P1	S1	-
RDER72A105K2□□C03□	X7R	100	1.0μF ±10%	5.5 x 4.0	3.15	5.0	K1	M1	-
RDEC72A155K3□□C03□	X7S	100	1.5μF ±10%	5.5 x 5.0	4.0	2.5	P1	S1	-
RDEC72A155K3□□C03□	X7S	100	1.5μF ±10%	5.5 x 5.0	4.0	5.0	K1	M1	-
RDEC72A225K3□□C03□	X7S	100	2.2μF ±10%	5.5 x 5.0	4.0	2.5	P1	S1	-
RDEC72A225K3□□C03□	X7S	100	2.2μF ±10%	5.5 x 5.0	4.0	5.0	K1	M1	-
RDEC72A475MW□□C03□	X7S	100	4.7μF ±20%	5.5 x 7.5	4.0	5.0	K1	M1	-
RDER72E102K2□□A11□	X7R	250	1000pF ±10%	5.0 x 3.5	3.15	5.0	K1	M1	-
RDER72E152K2□□A11□	X7R	250	1500pF ±10%	5.0 x 3.5	3.15	5.0	K1	M1	-
RDER72E222K2□□A11□	X7R	250	2200pF ±10%	5.0 x 3.5	3.15	5.0	K1	M1	-
RDER72E332K2□□A11□	X7R	250	3300pF ±10%	5.0 x 3.5	3.15	5.0	K1	M1	-
RDER72E472K2□□A11□	X7R	250	4700pF ±10%	5.0 x 3.5	3.15	5.0	K1	M1	-
RDER72E682K2□□A11□	X7R	250	6800pF ±10%	5.0 x 3.5	3.15	5.0	K1	M1	-
RDER72E103K2□□A11□	X7R	250	10000pF ±10%	5.0 x 3.5	3.15	5.0	K1	M1	-
RDER72E153K2□□C11□	X7R	250	15000pF ±10%	5.0 x 3.5	3.15	5.0	K1	M1	-
RDER72E223K2□□C11□	X7R	250	22000pF ±10%	5.0 x 3.5	3.15	5.0	K1	M1	-
RDER72E333K2□□C11□	X7R	250	33000pF ±10%	5.0 x 3.5	3.15	5.0	K1	M1	-
RDER72E473K2□□C11□	X7R	250	47000pF ±10%	5.0 x 3.5	3.15	5.0	K1	M1	-
RDER72E683K3□□C11□	X7R	250	68000pF ±10%	5.0 x 4.5	3.15	5.0	K1	M1	-
RDER72E104K3□□C11□	X7R	250	0.10μF ±10%	5.0 x 4.5	3.15	5.0	K1	B1	-
RDER72E154K8□□C11□	X7R	250	0.15μF ±10%	7.5 x 5.5	3.15	5.0	K1	M1	-
RDER72E224K8□□C11□	X7R	250	0.22μF ±10%	7.5 x 5.5	3.15	5.0	K1	M1	-
RDER72E334K5□□C13□	X7R	250	0.33μF ±10%	7.5 x 7.5	4.0	5.0	B1	E1	-
RDER72E474K5□□C13□	X7R	250	0.47μF ±10%	7.5 x 7.5	4.0	5.0	B1	E1	-
RDER72E105MU□□C13□	X7R	250	1.0μF ±20%	7.7 x 12.5	4.0	5.0	B1	E1	-
RDER72J102K2□□C11□	X7R	630	1000pF ±10%	5.0 x 3.5	3.15	5.0	K1	M1	-
RDER72J152K2□□C11□	X7R	630	1500pF ±10%	5.0 x 3.5	3.15	5.0	K1	M1	-
RDER72J222K2□□C11□	X7R	630	2200pF ±10%	5.0 x 3.5	3.15	5.0	K1	M1	-
RDER72J332K2□□C11□	X7R	630	3300pF ±10%	5.0 x 3.5	3.15	5.0	K1	M1	-
RDER72J472K2□□C11□	X7R	630	4700pF ±10%	5.0 x 3.5	3.15	5.0	K1	M1	-
RDER72J682K2□□C11□	X7R	630	6800pF ±10%	5.0 x 3.5	3.15	5.0	K1	M1	-
RDER72J103K2□□C11□	X7R	630	10000pF ±10%	5.0 x 3.5	3.15	5.0	K1	M1	-
RDER72J153K2□□C11□	X7R	630	15000pF ±10%	5.0 x 3.5	3.15	5.0	K1	M1	-

Continued on the following page.

Continued from the preceding page.

Part Number	Temp. Char.	Rated Voltage (Vdc)	Capacitance	Dimensions LxW (mm)	Dimension T (mm)	Lead Space F (mm)	Lead Style Code Bulk	Lead Style Code Taping (1)	Lead Style Code Taping (2)
RDER72J223K3□□C11□	X7R	630	22000pF ±10%	5.0 x 4.5	3.15	5.0	K1	M1	-
RDER72J333K3□□C11□	X7R	630	33000pF ±10%	5.0 x 4.5	3.15	5.0	K1	M1	-
RDER72J473K3□□C11□	X7R	630	47000pF ±10%	5.0 x 4.5	3.15	5.0	K1	M1	-
RDER72J683K8□□C11□	X7R	630	68000pF ±10%	7.5 x 5.5	3.15	5.0	K1	M1	-
RDER72J104K8□□C11□	X7R	630	0.10µF ±10%	7.5 x 5.5	3.15	5.0	K1	M1	-
RDER72J154K5□□C13□	X7R	630	0.15µF ±10%	7.5 x 8.0	4.0	5.0	B1	E1	-
RDER72J224K5□□C13□	X7R	630	0.22µF ±10%	7.5 x 8.0	4.0	5.0	B1	E1	-
RDER72J474MU□□C13□	X7R	630	0.47µF ±20%	7.7 x 13.0	4.0	5.0	B1	E1	-

Two blank columns are filled with the lead style code. Please refer to the 3 columns on the right for the appropriate code.
The last blank column is filled with the packaging code. (B: bulk, A: ammo pack)

High Dielectric Constant Type, F/Y5V Characteristics

Part Number	Temp. Char.	Rated Voltage (Vdc)	Capacitance	Dimensions LxW (mm)	Dimension T (mm)	Lead Space F (mm)	Lead Style Code Bulk	Lead Style Code Taping (1)	Lead Style Code Taping (2)
RDEF11H103Z0□□C01□	F	50	10000pF +80/-20%	4.0 x 3.5	2.5	5.0	K1	M1	-
RDEF11H103Z0□□C01□	F	50	10000pF +80/-20%	5.0 x 3.5	2.5	2.5	P1	S1	-
RDEF51H103Z0□□C03□	Y5V	50	10000pF +80/-20%	4.0 x 3.5	2.5	5.0	K1	M1	-
RDEF51H103Z0□□C03□	Y5V	50	10000pF +80/-20%	5.0 x 3.5	2.5	2.5	P1	S1	-
RDEF11H223Z0□□C01□	F	50	22000pF +80/-20%	4.0 x 3.5	2.5	5.0	K1	M1	-
RDEF11H223Z0□□C01□	F	50	22000pF +80/-20%	5.0 x 3.5	2.5	2.5	P1	S1	-
RDEF51H223Z0□□C03□	Y5V	50	22000pF +80/-20%	4.0 x 3.5	2.5	5.0	K1	M1	-
RDEF51H223Z0□□C03□	Y5V	50	22000pF +80/-20%	5.0 x 3.5	2.5	2.5	P1	S1	-
RDEF11H473Z0□□C01□	F	50	47000pF +80/-20%	4.0 x 3.5	2.5	5.0	K1	M1	-
RDEF11H473Z0□□C01□	F	50	47000pF +80/-20%	5.0 x 3.5	2.5	2.5	P1	S1	-
RDEF51H473Z0□□C03□	Y5V	50	47000pF +80/-20%	4.0 x 3.5	2.5	5.0	K1	M1	-
RDEF51H473Z0□□C03□	Y5V	50	47000pF +80/-20%	5.0 x 3.5	2.5	2.5	P1	S1	-
RDEF11H104Z0□□C01□	F	50	0.10µF +80/-20%	4.0 x 3.5	2.5	5.0	K1	M1	-
RDEF11H104Z0□□C01□	F	50	0.10µF +80/-20%	5.0 x 3.5	2.5	2.5	P1	S1	-
RDEF51H104Z0□□C03□	Y5V	50	0.10µF +80/-20%	4.0 x 3.5	2.5	5.0	K1	M1	-
RDEF51H104Z0□□C03□	Y5V	50	0.10µF +80/-20%	5.0 x 3.5	2.5	2.5	P1	S1	-

Two blank columns are filled with the lead style code. Please refer to the 3 columns on the right for the appropriate code.
The last blank column is filled with the packaging code. (B: bulk, A: ammo pack)

Specifications and Test Methods

No.	Item		Specifications: Temperature Compensating Type	Specifications: High Dielectric Constant Type	Test Method
1	Operating Temperature Range		-55 to +125˚C	Char. X7R, X7S: -55 to +125˚C Char. F: -25 to +85˚C Char. Y5V: -30 to +85˚C	–
2	Appearance		No defects or abnormalities		Visual inspection
3	Dimension and Marking		See previous pages		Visual inspection, Vernier Caliper
4	Dielectric Strength	Between Terminals	No defects or abnormalities		The capacitors should not be damaged when test voltages of Table are applied between the terminals for 1 to 5 sec. (Charge/Discharge current ≦ 50mA) Temperature Compensating Type Rated Voltage: Test Voltage DC50V, DC100V: 300% of the rated voltage High Dielectric Constant Type Rated Voltage: Test Voltage DC25V, DC50V: 250% of the rated voltage DC100V, DC250V: 200% of the rated voltage DC630V: 150% of the rated voltage
		Body Insulation	No defects or abnormalities		The capacitor is placed in a container with metal balls of 1mm diameter so that each terminal, short-circuited, is kept approximately 2mm from the balls as shown in the figure, and 250% of the rated voltage (200% of the rated voltage in case of rated voltage: DC100V, DC250V, DC630V) is impressed for 1 to 5 sec. between capacitor terminals and metal balls. (Charge/Discharge current ≦ 50mA) 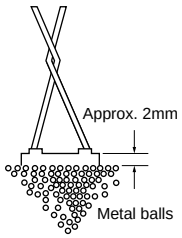
5	Insulation Resistance	Between Terminals	Rated Voltage: DC25V, DC50V, DC100V 10,000MΩ min. or 500MΩ • μF min. whichever is smaller Rated Voltage: DC250V, DC630V 10,000MΩ min. or 100MΩ • μF min. whichever is smaller		The insulation resistance should be measured with a DC voltage not exceeding the rated voltage (DC500±50V in case of rated vlotage: DC630V) at normal temperature and humidity and within 2 min. of charging. (Charge/Discharge current ≦ 50mA)
6	Capacitance		Within the specified tolerance		The capacitance, Q/D.F. should be measured at 25˚C at the frequency and voltage shown in the table. Temperature Compensating Type Item \ Capacitance: C≦1000pF / C>1000pF Frequency: 1±0.1MHz / 1±0.1kHz Voltage: AC0.5 to 5V (r.m.s.) / AC1±0.2V (r.m.s.) High Dielectric Constant Type Item \ Capacitance: C≦10μF / C>10μF Frequency: 1±0.1kHz / 120±24Hz Voltage: AC1±0.2V (r.m.s.) / AC0.5±0.1V (r.m.s.)
7	Q/Dissipation Factor (D.F.)		30pF min.: Q≧1,000 30pF max.: Q≧400+20C C: Nominal capacitance (pF)	Char. X7R: 0.025 max. Char. F, Y5V: 0.05 max. Char. X7S: 0.125 max.	

Continued on the following page.

Specifications and Test Methods

Continued from the preceding page.

No.	Item		Specifications: Temperature Compensating Type	Specifications: High Dielectric Constant Type	Test Method
8	Capacitance Temperature Characteristics	Capacitance Change	Within the specified tolerance (Table A on last column)	Within the specified tolerance (Table B on last column)	The capacitance change should be measured after 5 min. at each specified temperature stage. (1) Temperature Compensating Type The temperature coefficient is determined using the capacitance measured in step 3 as a reference. When cycling the temperature sequentially from step 1 through 5 (-55 to +125˚C) the capacitance should be within the specified tolerance for the temperature coefficient and capacitance change as shown in Table A. The capacitance drift is calculated by dividing the differences between the maximum and minimum measured values in step 1, 3 and 5 by the cap. value in step 3. (2) High Dielectric Constant Type The ranges of capacitance change compared with the 25˚C (Char. F: 20˚C) value over the temperature ranges as shown in Table B should be within the specified ranges. • Pretreatment (for high dielectric constant type) Perform a heat treatment at 150+0/-10°C for 1 hr., and then let sit at room temperature for 24±2 hrs.
		Temperature Coefficient	Within the specified tolerance (Table A on last column)		
		Capacitance Drift	Within ±0.2% or ±0.05pF, whichever is larger		

Step	Temperature (˚C)
1	25±2
2	-55±3
3	25±2
4	125±3
5	25±2

No.	Item		Specifications	Test Method
9	Terminal Strength	Tensile Strength	Termination not to be broken or loosened	As in the figure, fix the capacitor body, apply the force gradually to each lead in the radial direction of the capacitor until reaching 10N and then keep the force applied for 10±1 sec. 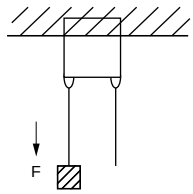
		Bending Strength	Termination not to be broken or loosened	Each lead wire should be subjected to a force of 2.5N and then bent 90° at the point of egress in one direction. Each wire is then returned to the original position and bent 90° in the opposite direction at the rate of one bend per 2 to 3 sec.

No.	Item		Specifications: Temperature Compensating Type	Specifications: High Dielectric Constant Type	Test Method
10	Vibration Resistance	Appearance	No defects or abnormalities		The capacitor is soldered securely to a supporting terminal and a 10 to 55Hz vibration of 1.5mm peak-peak amplitude is applied for 6 hrs. total, 2 hrs. in each mutually perpendicular direction. Allow 1 min. to cycle the frequency from 10Hz to 55Hz and the converse.
		Capacitance	Within the specified tolerance		
		Q/D.F.	30pF min.: Q≧1,000 30pF max.: Q≧400+20C C: Nominal capacitance (pF)	Char. X7R: 0.025 max. Char. F, Y5V: 0.05 max. Char. X7S: 0.125 max.	
11	Solderability of Leads		Lead wire should be soldered with uniform coating on the axial direction over 3/4 of the circumferential direction.		The terminal of a capacitor is dipped into a 25% ethanol (JIS-K-8101) solution of rosin (JIS-K-5902) and then into molten solder for 2±0.5 sec. In both cases the depth of dipping is up to about 1.5mm to 2mm from the terminal body. Temp. of solder: 245±5˚C Lead Free Solder (Sn-3.0Ag-0.5Cu) 235±5˚C H60A or H63A Eutectic Solder
12	Resistance to Soldering Heat	Appearance	No defects or abnormalities		The lead wire is immersed in the melted solder 1.5mm to 2mm from the main body at 350±10°C for 3.5±0.5 sec. The specified items are measured after 24±2 hrs. • Pretreatment (for high dielectric constant type) Perform a heat treatment at 150+0/-10°C for 1 hr., and then let sit at room temperature for 24±2 hrs.
		Capacitance Change	Within ±2.5% or ±0.25pF (whichever is larger)	Char. X7R, X7S: Within ±10% Char. F, Y5V: Within ±20%	
		Dielectric Strength (Between Terminals)	No defects		

Continued on the following page.

Specifications and Test Methods

Continued from the preceding page.

No.	Item		Specifications: Temperature Compensating Type	Specifications: High Dielectric Constant Type	Test Method
13	Temperature Cycle	Appearance	No defects or abnormalities		The capacitor should be subjected to 5 temperature cycles. Remove and set for 24±2 hrs. at room temperature, then measure. • Pretreatment (for high dielectric constant type) Perform a heat treatment at 150+0/-10°C for 1 hr., and then let sit at room temperature for 24±2 hrs.
		Capacitance Change	Within ±5% or ±0.5pF (whichever is larger)	Char. X7R, X7S: Within ±12.5% Char. F, Y5V: Within ±30%	
		Q/D.F.	30pF min.: Q≧350 10pF to 30pF: Q≧275+5C/2 10pF max.: Q≧200+10C C: Nominal capacitance (pF)	Char. X7R: 0.05 max. Char. F, Y5V: 0.075 max. Char. X7S: 0.2 max.	
		Insulation Resistance	Rated Voltage: DC25V, DC50V, DC100V 1,000MΩ, 50MΩ • μF min. (whichever is smaller) Rated Voltage: DC250V, DC630V 1,000MΩ, 10MΩ • μF min. (whichever is smaller)		
		Dielectric Strength (Between Terminals)	No defects or abnormalities		
14	Humidity (Steady State)	Appearance	No defects or abnormalities		Set the capacitor at 40±2°C and relative humidity of 90 to 95% for 500^{+24}_{-0} hrs. Remove and set for 24±2 hrs. at room temperature, then measure. • Pretreatment (for high dielectric constant type) Perform a heat treatment at 150+0/-10°C for 1 hr., and then let sit at room temperature for 24±2 hrs.
		Capacitance Change	Within ±5% or ±0.5pF (whichever is larger)	Char. X7R, X7S: Within ±15% Char. F, Y5V: Within ±30%	
		Q/D.F.	30pF min.: Q≧350 10pF to 30pF: Q≧275+5C/2 10pF max.: Q≧200+10C C: Nominal capacitance (pF)	Char. X7R: 0.05 max. Char. F, Y5V: 0.075 max. Char. X7S: 0.2 max.	
		Insulation Resistance	Rated Voltage: DC25V, DC50V, DC100V 1,000MΩ, 50MΩ • μF min. (whichever is smaller) Rated Voltage: DC250V, DC630V 1,000MΩ, 10MΩ • μF min. (whichever is smaller)		
15	Humidity Load	Appearance	No defects or abnormalities		Apply the rated voltage for 500^{+24}_{-0} hrs. at 40±2°C and in 90 to 95% humidity. Remove and set for 24±2 hrs. at room temperature, then measure. (Charge/Discharge current ≦50mA) • Pretreatment (for high dielectric constant type) Perform a heat treatment at 150+0/-10°C for 1 hr., and then let sit at room temperature for 24±2 hrs.
		Capacitance Change	Within ±7.5% or ±0.75pF (whichever is larger)	Char. X7R, X7S: Within ±15% Char. F, Y5V: Within ±30%	
		Q/D.F.	30pF min.: Q≧200 30pF max.: Q≧100+10C/3 C: Nominal capacitance (pF)	Char. X7R: 0.05 max. Char. F, Y5V: 0.075 max. Char. X7S: 0.2 max.	
		Insulation Resistance	Rated Voltage: DC25V, DC50V, DC100V 500MΩ or 25MΩ • μF min. (whichever is smaller) Rated Voltage: DC250V, DC630V 1,000MΩ or 10MΩ • μF min. (whichever is smaller)		
16	High Temperature Load	Appearance	No defects or abnormalities		Apply voltage in Table for 1000^{+48}_{-0} hrs. at the maximum operating temperature±3°C. Remove and set for 24±2 hrs. at room temperature, then measure. (Charge/Discharge current ≦50mA) • Pretreatment (for high dielectric constant type) Appy test voltage for 1 hr., at test temperature. Remove and set for 24±2 hrs. at room temperature.
		Capacitance Change	Within ±3% or ±0.3pF (whichever is larger)	Char. X7R, X7S: Within ±15% Char. F, Y5V: Within ±30%	
		Q/D.F.	30pF min.: Q≧350 10pF to 30pF: Q≧275+5C/2 10pF max.: Q≧200+10C C: Nominal capacitance (pF)	Char. X7R: 0.05 max. Char. F, Y5V: 0.075 max. Char. X7S: 0.2 max.	
		Insulation Resistance	Rated Voltage: DC25V, DC50V, DC100V 1,000MΩ, 50MΩ • μF min. (whichever is smaller) Rated Voltage: DC250V, DC630V 1,000MΩ, 10MΩ • μF min. (whichever is smaller)		
17	Solvent Resistance	Appearance	No defects or abnormalities		The capacitor should be fully immersed, unagitated, in reagent at 20 to 25°C for 30±5 sec. and then removed gently. Marking on the surface of the capacitor should immediately be visually examined. Reagent: • Isopropyl alcohol
		Marking	Legible		

Rated Voltage	Test Voltage
DC25V, DC50V DC100V, DC250V	150% of the rated voltage
DC630V	120% of the rated voltage

Step	Temperature (°C)	Time (min)
1	Min. Operating Temp. ±3	30±3
2	Room Temp.	3 max.
3	Max. Operating Temp. ±3	30±3
4	Room Temp.	3 max.

Table A

Char.	Nominal Values (ppm/°C) *1	Capacitance Change from 25°C (%)					
		–55°C		–30°C		–10°C	
		Max.	Min.	Max.	Min.	Max.	Min.
C0G	0±30	0.58	–0.24	0.40	–0.17	0.25	–0.11

*1: Nominal values denote the temperature coefficient within a range of 25 to 125°C

Table B

Char.	Temp. Range	Reference Temp.	Cap. Change Rate
X7R	–55 to +125°C	25°C	Within ±15%
X7S			Within ±22%
Y5V	–30 to + 85°C		Within $^{+22}_{-82}$%
F	–25 to + 85°C	20°C	Within $^{+30}_{-80}$%

Radial Lead Type Monolithic Ceramic Capacitors

RDE Series Large Capacitance and High Allowable Ripple Current (For Commercial Use Only) (DC250V-DC630V)

■ Features

1. Higher capacitance with DC-Bias; approximately 40% higher than X7R under loaded rated voltage.
2. Applicable for use as a DC smoothing capacitor in LED Bulb Lighting circuits after the bridge rectifier circuit
   AC100V input: 250V rating type
   maximum capacitance of X7T, 250V is 2.2 micro F though X7R, 630V is 0.47 micro F.
   AC200V input: 450V rating type
   maximum capacitance of X7T, 450V is 1.2 micro F though X7R, 630V is 0.47 micro F.
3. Allowable higher ripple current
4. Reduces acoustic noise
   Approximately 15dB reduction in comparison to leaded X7R characteristics parts.
   Approximately 30dB reduction in comparison to SMD X7T characteristics part because the contact area is smaller than a SMD.
5. Maximum capacitance is doubled by the dual chip structure in the leaded component construction.

■ Applications

1. DC smoothing capacitor for LED bulb
2. PFC capacitor for general use SMPS
3. Replace Al-E capacitor for long-life equipment

■ Dimensions

Dimensions and Lead Style Code	DC Rated Voltage	Dimensions (mm)					
		L	W	W1	T	F	d
2K1/2M1	250V/450V/630V	5.5	4.0	6.0	See the individual product specifications	5.0	0.5
3K1/3M1	250V/450V/630V	5.5	5.0	7.5		5.0	0.5
5B1/5E1	250V/450V/630V	7.5	7.5*	-		5.0	0.5
8K1/8M1	250V/450V/630V	7.5	5.5	8.0		5.0	0.5
UB1/UE1	250V/450V/630V	7.7	12.5*	-		5.0	0.5

*DC630V: W+0.5mm

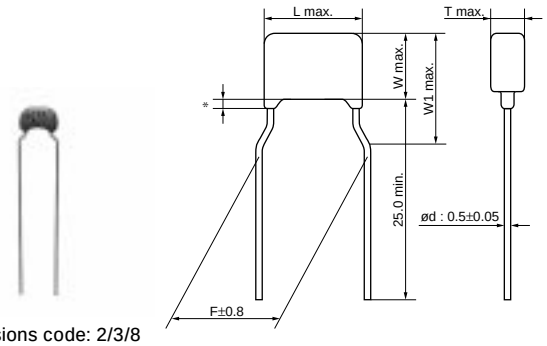

Dimensions code: 2/3/8
Lead style code: K1

* Coating extension does not exceed the end of the lead bend.
· Lead Wire : Solder Coated Copper Wire or Solder Coated CP Wire

(in mm)

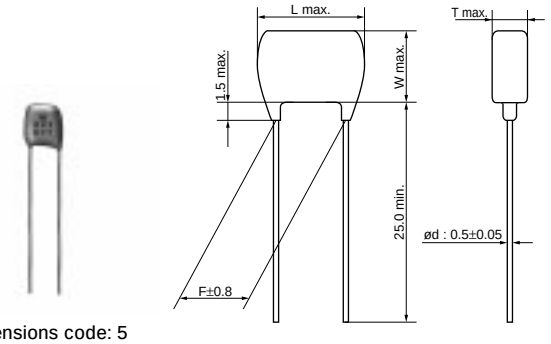

Dimensions code: 5
Lead style code: B1

· Lead Wire : Solder Coated Copper Wire or Solder Coated CP Wire

(in mm)

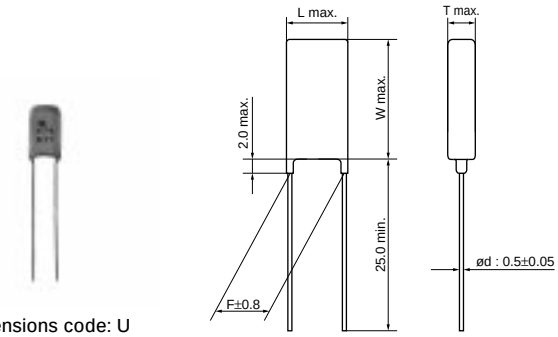

Dimensions code: U
Lead style code: B1

· Lead Wire : Solder Coated Copper Wire or Solder Coated CP Wire

(in mm)

Continued on the following page.

5

Continued from the preceding page.

■ Marking

Dimensions Code \ Rated Voltage	DC250V	DC450V	DC630V
Temp. Char.	X7T		
2	Ⓜ 683 K47	Ⓜ 153 K97	Ⓜ 153 K77
3, 8	Ⓜ 334 K47	Ⓜ 104 K97	Ⓜ 223 K77
5, U	Ⓜ 225 M47	Ⓜ 474 K97	Ⓜ 474 M77
Temperature Characteristics	Marked with code (X7T char.: 7)		
Nominal Capacitance	Marked with 3 figures		
Capacitance Tolerance	Marked with code		
Rated Voltage	Marked with code (DC250V: 4, DC450V: 9, DC630V: 7)		
Manufacturer's Identification	Marked with Ⓜ		

High Dielectric Constant Type, X7T Characteristics

Part Number	Temp. Char.	Rated Voltage (Vdc)	Capacitance	Dimensions LxW (mm)	Dimension T (mm)	Lead Space F (mm)	Lead Style Code Bulk	Lead Style Code Taping (1)	Lead Style Code Taping (2)
RDED72E333K2□□C11□	X7T	250	33000pF ±10%	5.5 x 4.0	3.15	5.0	K1	M1	-
RDED72E473K2□□C11□	X7T	250	47000pF ±10%	5.5 x 4.0	3.15	5.0	K1	M1	-
RDED72E683K2□□C11□	X7T	250	68000pF ±10%	5.5 x 4.0	3.15	5.0	K1	M1	-
RDED72E104K3□□C11□	X7T	250	0.10μF ±10%	5.5 x 5.0	4.0	5.0	K1	M1	-
RDED72E154K3□□C11□	X7T	250	0.15μF ±10%	5.5 x 5.0	4.0	5.0	K1	M1	-
RDED72E224K8□□C11□	X7T	250	0.22μF ±10%	7.5 x 5.5	4.0	5.0	K1	M1	-
RDED72E334K8□□C11□	X7T	250	0.33μF ±10%	7.5 x 5.5	4.0	5.0	K1	M1	-
RDED72E474K5□□C13□	X7T	250	0.47μF ±10%	7.5 x 7.5	4.5	5.0	B1	E1	-
RDED72E684K5□□C13□	X7T	250	0.68μF ±10%	7.5 x 7.5	4.5	5.0	B1	E1	-
RDED72E105K5□□C13□	X7T	250	1.0μF ±10%	7.5 x 7.5	4.5	5.0	B1	E1	-
RDED72E225MU□□C13□	X7T	250	2.2μF ±20%	7.7 x 12.5	4.5	5.0	B1	E1	-
RDED72W103K2□□C11□	X7T	450	10000pF ±10%	5.5 x 4.0	3.15	5.0	K1	M1	-
RDED72W153K2□□C11□	X7T	450	15000pF ±10%	5.5 x 4.0	3.15	5.0	K1	M1	-
RDED72W223K2□□C11□	X7T	450	22000pF ±10%	5.5 x 4.0	3.15	5.0	K1	M1	-
RDED72W333K2□□C11□	X7T	450	33000pF ±10%	5.5 x 4.0	3.15	5.0	K1	M1	-
RDED72W473K2□□C11□	X7T	450	47000pF ±10%	5.5 x 4.0	3.15	5.0	K1	M1	-
RDED72W683K3□□C11□	X7T	450	68000pF ±10%	5.5 x 5.0	4.0	5.0	K1	M1	-
RDED72W104K3□□C11□	X7T	450	0.10μF ±10%	5.5 x 5.0	4.0	5.0	K1	M1	-
RDED72W154K8□□C11□	X7T	450	0.15μF ±10%	7.5 x 5.5	4.0	5.0	K1	M1	-
RDED72W224K5□□C13□	X7T	450	0.22μF ±10%	7.5 x 7.5	4.5	5.0	B1	E1	-
RDED72W334K5□□C13□	X7T	450	0.33μF ±10%	7.5 x 7.5	4.5	5.0	B1	E1	-
RDED72W474K5□□C13□	X7T	450	0.47μF ±10%	7.5 x 7.5	4.5	5.0	B1	E1	-
RDED72W564K5□□C13□	X7T	450	0.56μF ±10%	7.5 x 7.5	4.5	5.0	B1	E1	-
RDED72W105MU□□C13□	X7T	450	1.0μF ±20%	7.7 x 12.5	4.5	5.0	B1	E1	-
RDED72W125MU□□C13□	X7T	450	1.2μF ±20%	7.7 x 12.5	4.5	5.0	B1	E1	-
RDED72J103K2□□C11□	X7T	630	10000pF ±10%	5.5 x 4.0	3.15	5.0	K1	M1	-
RDED72J153K2□□C11□	X7T	630	15000pF ±10%	5.5 x 4.0	3.15	5.0	K1	M1	-
RDED72J223K3□□C11□	X7T	630	22000pF ±10%	5.5 x 5.0	4.0	5.0	K1	M1	-
RDED72J333K3□□C11□	X7T	630	33000pF ±10%	5.5 x 5.0	4.0	5.0	K1	M1	-
RDED72J473K3□□C11□	X7T	630	47000pF ±10%	5.5 x 5.0	4.0	5.0	K1	M1	-
RDED72J683K8□□C11□	X7T	630	68000pF ±10%	7.5 x 5.5	4.0	5.0	K1	M1	-
RDED72J104K5□□C13□	X7T	630	0.10μF ±10%	7.5 x 8.0	4.5	5.0	B1	E1	-
RDED72J154K5□□C13□	X7T	630	0.15μF ±10%	7.5 x 8.0	4.5	5.0	B1	E1	-
RDED72J224K5□□C13□	X7T	630	0.22μF ±10%	7.5 x 8.0	4.5	5.0	B1	E1	-

Continued on the following page.

Continued from the preceding page.

Part Number	Temp. Char.	Rated Voltage (Vdc)	Capacitance	Dimensions LxW (mm)	Dimension T (mm)	Lead Space F (mm)	Lead Style Code Bulk	Lead Style Code Taping (1)	Lead Style Code Taping (2)
RDED72J274K5□□C13□	X7T	630	0.27μF ±10%	7.5 x 8.0	4.5	5.0	B1	E1	-
RDED72J474MU□□C13□	X7T	630	0.47μF ±20%	7.7 x 13.0	4.5	5.0	B1	E1	-
RDED72J564MU□□C13□	X7T	630	0.56μF ±20%	7.7 x 13.0	4.5	5.0	B1	E1	-

Two blank columns are filled with the lead style code. Please refer to the 3 columns on the right for the appropriate code.
The last blank column is filled with the packaging code. (B: bulk, A: ammo pack)

Specifications and Test Methods

No.	Item		Specifications	Test Method
1	Operating Temperature Range		-55 to +125˚C	–
2	Appearance		No defects or abnormalities	Visual inspection
3	Dimension and Marking		See previous pages	Visual inspection, Vernier Caliper
4	Dielectric Strength	Between Terminals	No defects or abnormalities	The capacitor should not be damaged when voltage in Table is applied between the terminations for 1 to 5 sec. (Charge/Discharge current ≦ 50mA) Rated Voltage / Test Voltage DC250V: 200% of the rated voltage DC450V: 150% of the rated voltage DC630V: 120% of the rated voltage
		Body Insulation	No defects or abnormalities	The capacitor is placed in a container with metal balls of 1mm diameter so that each terminal, short-circuit, is kept approximately 2mm from the balls as shown in the figure, and 200% of the rated DC voltage is impressed for 1 to 5 sec. between capacitor terminals and metal balls. (Charge/Discharge current ≦ 50mA) 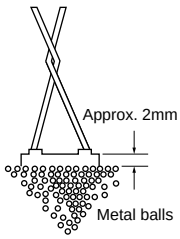
5	Insulation Resistance	Between Terminals	More than 10,000MΩ or 100MΩ · μF, Whichever is smaller	The insulation resistance should be measured with DC500±50V (DC250±25V in case of rated voltage: DC250V,DC450V) at normal temperature and humidity and within 2 min. of charging. (Charge/Discharge current ≦ 50mA)
6	Capacitance		Within the specified tolerance	The capacitance/D.F. should be measured at the frequency of 1±0.1kHz and a voltage of AC1±0.2V(r.m.s.).
7	Dissipation Factor (D.F.)		0.01 max.	
8	Capacitance Temperature Characteristics		Within +22/-33%	The capacitance change should be measured after 5 min. at each specified temperature stage. Step / Temperature (˚C) 1: 25±2 2: -55±3 3: 25±2 4: 125±3 5: 25±2
9	Terminal Strength	Tensile Strength	Termination not to be broken or loosened	As in the figure, fix the capacitor body, apply the force gradually to each lead in the radial direction of the capacitor until reaching 10N and then keep the force applied for 10±1 sec. 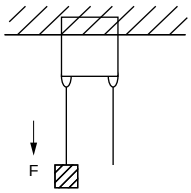
		Bending Strength	Termination not to be broken or loosened	Each lead wire should be subjected to a force of 2.5N and then bent 90˚ at the point of egress in one direction. Each wire is then returned to the original position and bent 90˚ in the opposite direction at the rate of one bend per 2 to 3 sec.
10	Vibration Resistance	Appearance	No defects or abnormalities	The capacitor should be firmly soldered to the supporting lead wire and vibrated at a frequency range of 10 to 55Hz, 1.5mm in total amplitude, with about a 1 minute rate of vibration change from 10Hz to 55Hz and back to 10Hz. Apply for a total of 6 hrs., 2 hrs. each in 3 mutually perpendicular directions.
		Capacitance	Within the specified tolerance	
		D.F.	0.01 max.	

Continued on the following page.

Specifications and Test Methods

Continued from the preceding page.

No.	Item		Specifications	Test Method
11	Solderability of Leads		Lead wire should be soldered with uniform coating on the axial direction over 3/4 of the circumferential direction.	The terminal of a capacitor is dipped into a solution of ethanol (JIS-K-8101) and rosin (JIS-K-5902) (25% rosin in weight proportion) and then into molten solder (JIS-Z-3282) for 2±0.5 sec. In both cases the depth of dipping is up to about 1.5 to 2mm from the terminal body. Temp. of solder: 245±5˚C Lead Free Solder (Sn-3.0Ag-0.5Cu) 235±5˚C H60A or H63A Eutectic Solder
12	Resistance to Soldering Heat	Appearance	No defects or abnormalities	The lead wire is immersed in the melted solder 1.5 to 2mm from the main body at 350±10˚C for 3.5±0.5 sec. The specified items are measured after 24±2 hrs. • Pretreatment Perform a heat treatment at 150+0/-10˚C for 1 hr., and then let sit at room temperature for 24±2 hrs.
		Capacitance Change	Within ±10%	
		Dielectric Strength (Between Terminals)	No defects	
13	Temperature Cycle	Appearance	No defects or abnormalities	The capacitor should be subjected to 5 temperature cycles. Step / Temperature (˚C) / Time (min) 1 / -55±3 / 30±3 2 / Room Temp. / 3 max. 3 / 125±3 / 30±3 4 / Room Temp. / 3 max. • Pretreatment Perform a heat treatment at 150+0/-10˚C for 1 hr., and then let sit at room temperature for 24±2 hrs.
		Capacitance Change	Within ±7.5%	
		D.F.	0.01 max.	
		Insulation Resistance	More than 10,000MΩ or 100MΩ · μF (Whichever is smaller)	
		Dielectric Strength (Between Terminals)	No defects or abnormalities	
14	Humidity (Steady State)	Appearance	No defects or abnormalities	Set the capacitor at 40±2˚C and relative humidity of 90 to 95% for 500 $^{+24}_{0}$ hrs. Remove and set for 24±2 hrs. at room temperature, then measure. • Pretreatment Perform a heat treatment at 150+0/-10˚C for 1 hr., and then let sit at room temperature for 24±2 hrs.
		Capacitance Change	Within ±12.5%	
		D.F.	0.02 max.	
		Insulation Resistance	More than 1,000MΩ or 10MΩ · μF (Whichever is smaller)	
15	Humidity Load	Appearance	No defects or abnormalities	Apply the rated voltage at 40±2˚C and relative humidity of 90 to 95% for 500 $^{+24}_{0}$ hrs. Remove and set for 24±2 hrs. at room temperature, then measure. (Charge/Discharge current ≦ 50mA) • Pretreatment Perform a heat treatment at 150+0/-10˚C for 1 hr., and then let sit at room temperature for 24±2 hrs.
		Capacitance Change	Within ±12.5%	
		D.F.	0.02 max.	
		Insulation Resistance	More than 1,000MΩ or 10MΩ · μF (Whichever is smaller)	
16	High Temperature Load	Appearance	No defects or abnormalities	Apply voltage in Table for 1000 $^{+48}_{0}$ hrs. at the maximum operating temperature. Remove and set for 24±2 hrs. at room temperature, then measure. (Charge/Discharge current ≦ 50mA) Rated Voltage / Test Voltage DC250V / 150% of the rated voltage DC450V / 130% of the rated voltage DC630V / 120% of the rated voltage • Pretreatment Apply test voltage for 1 hr., at test temperature. Remove and set for 24±2 hrs. at room temperature.
		Capacitance Change	Within ±12.5%	
		D.F.	0.02 max.	
		Insulation Resistance	More than 1,000MΩ or 10MΩ · μF (Whichever is smaller)	
17	Solvent Resistance	Appearance	No defects or abnormalities	The capacitor should be fully immersed, unagitated, in reagent at 20 to 25 ˚C for 30±5 sec. and then removed gently. Marking on the surface of the capacitor should immediately be visually examined. Reagent : • Isopropyl alcohol
		Marking	Legible	

5

RPE Series Characteristics Reference Data (Typical Example)

■ Capacitance - Temperature Characteristics

Temperature Compensating Type

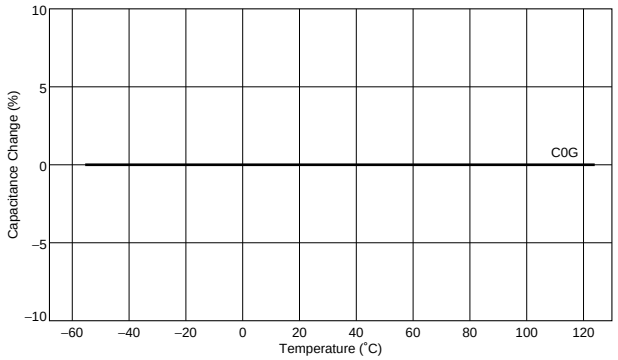

High Dielectric Constant Type

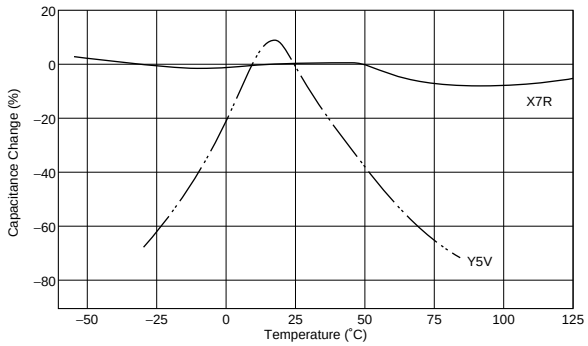

■ Capacitance - DC Voltage Characteristics

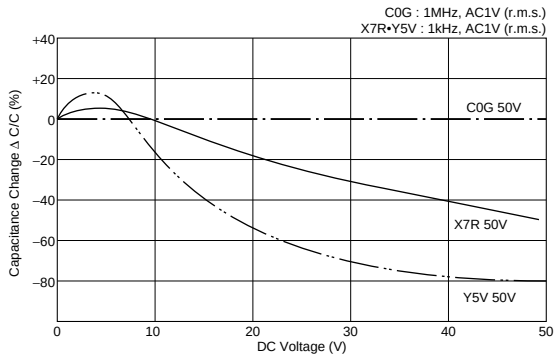

■ Capacitance Change - Aging

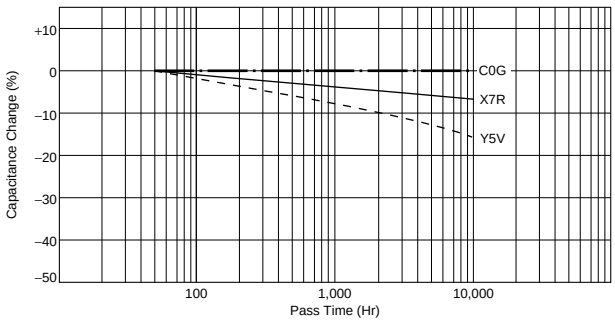

■ Capacitance - Resonant Frequency

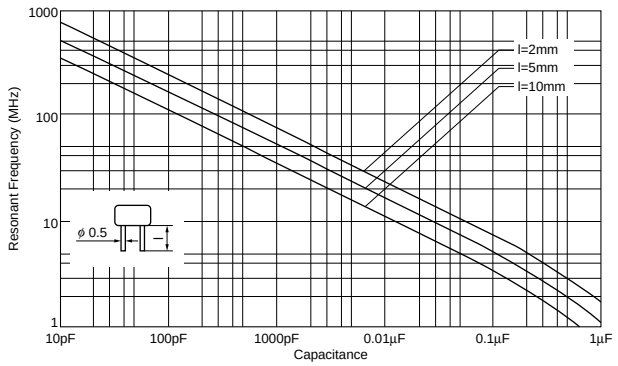

■ Impedance - Frequency Characteristics

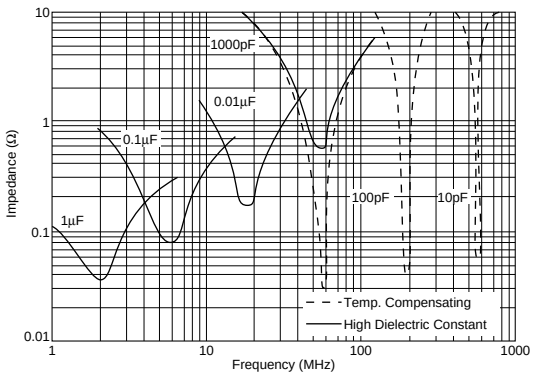

RPE Series Small Size, Large Capacitance Characteristics Reference Data (Typical Example)

■ Capacitance - Temperature Characteristics

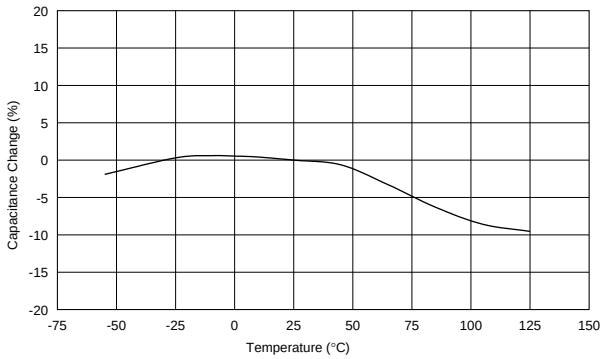

■ Capacitance - DC Voltage Characteristics

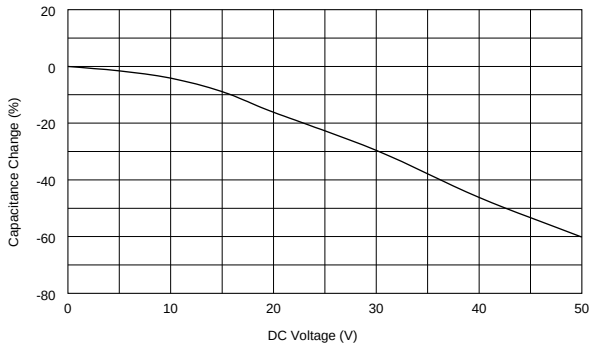

■ Impedance - Frequency Characteristics

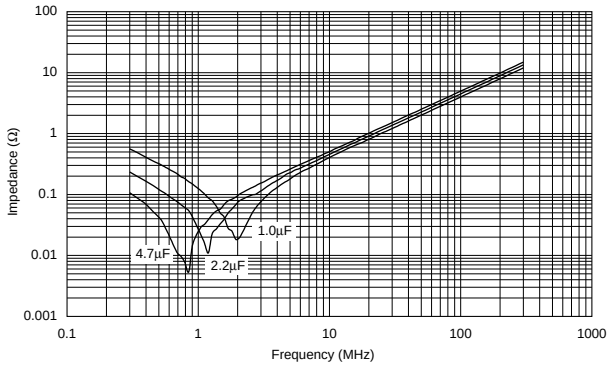

RH Series Characteristics Reference Data (Typical Example)

■ Capacitance - Temperature Characteristics

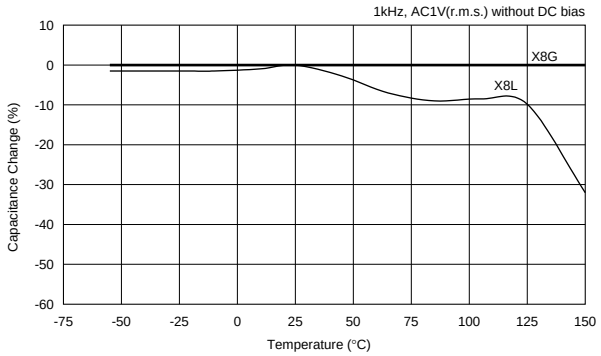

■ Capacitance - DC Voltage Characteristics

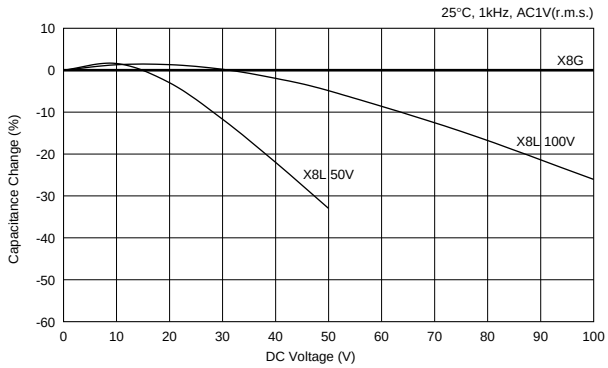

■ Capacitance Change - Aging

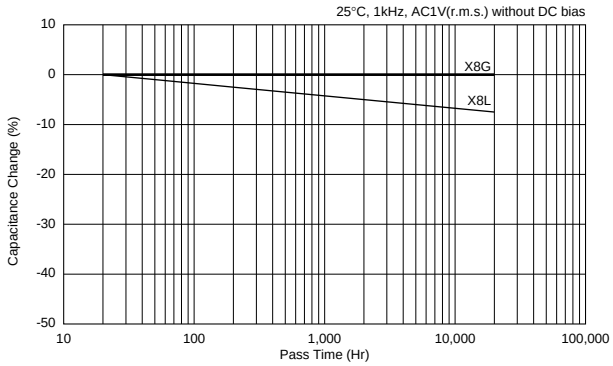

■ Impedance - Frequency Characteristics

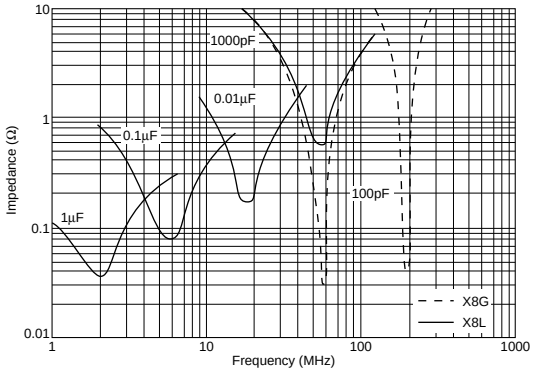

RDE Series Characteristics Reference Data (Typical Example)

■ Capacitance - Temperature Characteristics

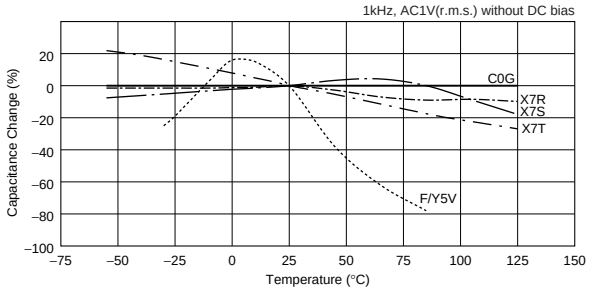

■ Capacitance - DC Voltage Characteristics

Rated Voltage: DC25V to DC100V

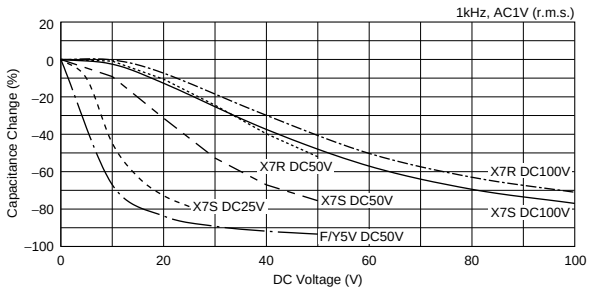

Rated Voltage: DC250V to DC630V

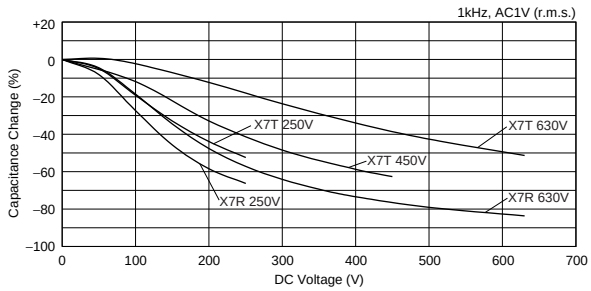

■ Capacitance Change - Aging

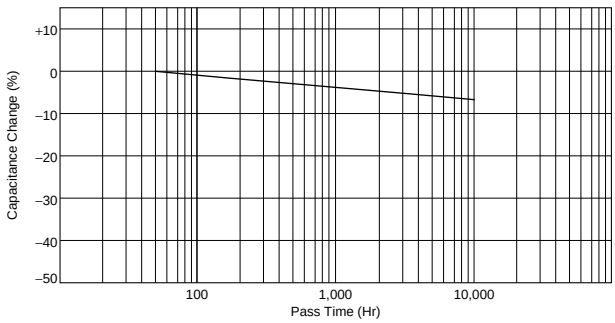

■ Capacitance - Resonant Frequency

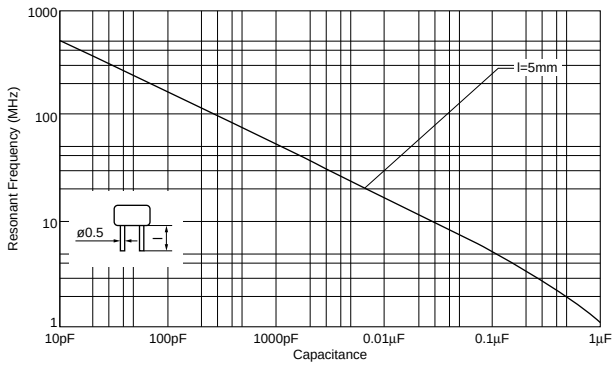

■ Impedance - Frequency Characteristics

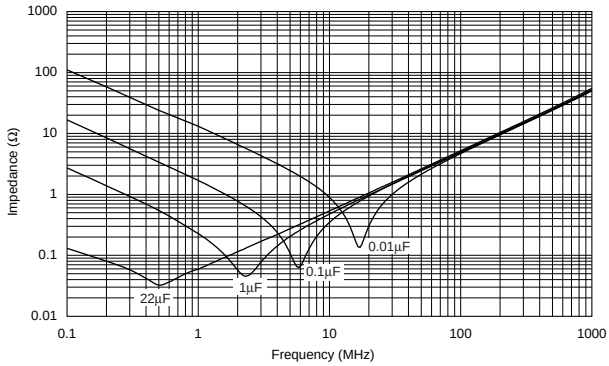

Packaging

■ Packaging

Two types of packaging for monolithic ceramic capacitors are available.

1. Bulk Packaging

Minimum Quantity

Dimensions Code	Dimensions (L×W)	Minimum Quantity (pcs./Bag)
0	4.0×3.5mm or 5.0×3.5mm (Depends on Part Number List)	500*1
1	4.0×3.5mm or 4.5×3.5mm or 5.0×3.5mm (Depends on Part Number List)	
2	5.0×3.5mm or 5.5×4.0mm or 5.7×4.5mm (Depends on Part Number List)	
3	5.0×4.5mm or 5.5×5.0mm or 6.0×5.5mm (Depends on Part Number List)	
5	7.5×7.5mm (DC630V: 7.5×8.0mm)	
6	10.0×10.0mm	
8	7.5×5.5mm	
W	5.5×7.5mm or 6.0×8.0mm (Depends on Part Number List)	
7	12.5×12.5mm	100
U	7.7×12.5mm (DC630V: 7.7×13.0mm)	200

Please order with an integral multiple of the minimum quantity above.

*1 400 pcs. for **RHDL81H□□□K3□□C03B**
250 pcs. for **RHDL81H106MWK1C03B**

2. Tape Carrier Packaging

(1) Dimensions of Ammo Pack

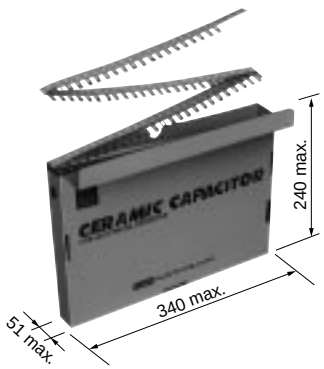

(in mm)

(2) Minimum Quantity

Dimensions Code	Dimensions (L×W)	Minimum Quantity (pcs./Ammo Pack)
0	4.0×3.5mm or 5.0×3.5mm (Depends on Part Number List)	2000*2
1	4.0×3.5mm or 4.5×3.5mm or 5.0×3.5mm (Depends on Part Number List)	
2	5.0×3.5mm or 5.5×4.0mm or 5.7×4.5mm (Depends on Part Number List)	
3	5.0×4.5mm or 5.5×5.0mm or 6.0×5.5mm (Depends on Part Number List)	
5	7.5×7.5mm (DC630V: 7.5×8.0mm)	2000*3
6	10.0×10.0mm	1500*4
8	7.5×5.5mm	
W	5.5×7.5mm or 6.0×8.0mm (Depends on Part Number List)	
U	7.7×12.5mm (DC630V: 7.7×13.0mm)	1000*5

Please order with an integral multiple of the minimum quantity above.

*2 1500 pcs. for **RPER71H335K3M1C60A, RPER71H475K3M1C60A, RDER71H335K3□□C03A, RDEC71E226K3□□C03A, RDEC72A155K3□□C03A, RDEC72A225K3□□C03A** and **RHD** Series

*3 1500 pcs. for **RPER71H335K5□□C03A, RPER71H475K5□□C03A, RPER72A105K5□□C03A** and **RDE** Series

(Two blank columns are filled with the lead style code.)

*4 1000 pcs. for **RHDL81H106MWM1C03A**

*5 1500 pcs. for **RDED72W105MUE1C13A, RDER72E105MUE1C13A, RDER72J474MUE1C13A**

"Minimum Quantity" means the numbers of units of each delivery or order. The quantity should be an integral multiple of the "minimum quantity." (Please note that the actual delivery quantity in a package may change sometimes.)

Continued on the following page.

Packaging

Continued from the preceding page.

Taping Dimensions

Inside Crimp Taping

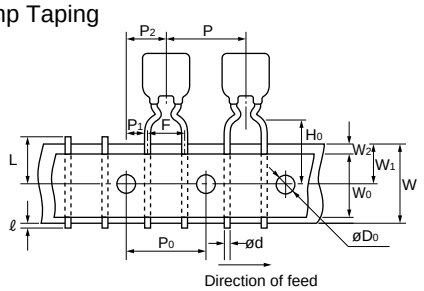

Dimensions and Lead style code	Dimensions (L×W)
0M1	4.0×3.5mm
1M1	4.0×3.5mm or 4.5×3.5mm (Depends on Part Number List)
2M1	5.0×3.5mm or 5.5×4.0mm or 5.7×4.5mm (Depends on Part Number List)
2M2	
3M1	5.0×4.5mm or 5.5×5.0mm (Depends on Part Number List)
3M2	
8M1	7.5×5.5mm
8M2	
WM1	5.5×7.5mm

Straight Taping

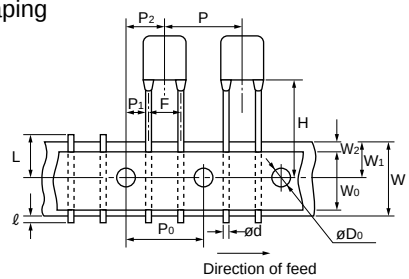

Dimensions and Lead style code	Dimensions (L×W)
1DB	4.0×3.5mm
2DB	5.7×4.5mm
3DB	6.0×5.5mm
5E1	7.5×7.5mm (DC630V: 7.5×8.0mm)
5E2	
6E1	10.0×10.0mm
6E2	
UE1	7.7×12.5mm (DC630V: 7.7×13.0mm)

Outside Crimp Taping

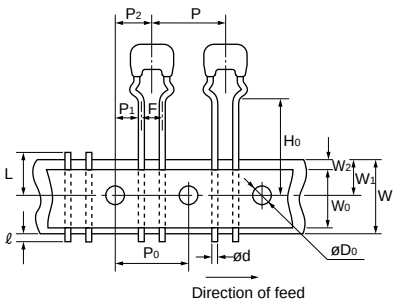

Dimensions and Lead style code	Dimensions (L×W)
0S1	5.0×3.5mm
1S1	
2S1	5.0×3.5mm or 5.5×4.0mm (Depends on Part Number List)
2S2	
3S1	5.0×4.5mm or 5.5×5.0mm (Depends on Part Number List)
3S2	

Item	Code	Dimensions (mm)
Pitch of Component	P	12.7±1.0
Pitch of Sprocket Hole	P_0	12.7±0.2
Lead Spacing	F	$2.5^{+0.4}_{-0.2}$ (DB) (S1) (S2)
		$5.0^{+0.6}_{-0.2}$
Length from Hole Center to Component Center	P_2	6.35±1.3
Length from Hole Center to Lead	P_1	3.85±0.7
		5.1±0.7 (DB) (S1) (S2)
		254±1.5 Total length of components pitch X 20
Body Dimension		Depends on Part Number List
Deviation Along Tape, Left or Right Defect	ΔS	±2.0
Carrier Tape Width	W	18.0±0.5
Position of Sprocket Hole	W_1	$9.0^{+0}_{-0.5}$
Lead Distance between Reference and Bottom Plane	H_0	16.0±0.5 (M1) (S1)
		20.0±0.5 (M2) (S2)
For Straight Lead Type	H	20±0.5 (E2), 17.5±0.5 (E1), 16±0.5 (DB)
Diameter of Sprocket Hole	D_0	4.0±0.1
Lead Diameter	d	0.5±0.05
Total Tape Thickness	t_1	0.6±0.3
Total Thickness of Tape and Lead Wire	t_2	1.5 max.
Body Thickness	T	Depends on Part Number List
Deviation Across Tape	Δh1 Δh2	1.0 max. (RHD Series: 1.5 max., Dimensions code W, U: 2.0 max.)
Portion to Cut in Case of Defect	L	$11.0^{+0}_{-1.0}$
Protrusion Length	ℓ	0.5 max.
Hold Down Tape Width	W_0	9.5 min.
Hold Down Tape Position	W_2	1.5±1.5
Coating Extension		Depends on Dimensions

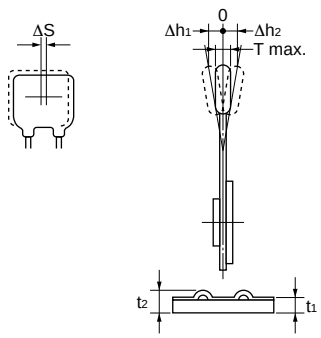

⚠Caution

■ ⚠Caution (Storage and Operating Condition)

Operating and storage environment

The insulating coating of capacitors does not form a perfect seal; therefore, do not use or store capacitors in a corrosive atmosphere, especially where chloride gas, sulfide gas, acid, alkali, salt or the like are present. Also avoid exposure to moisture. Before cleaning, bonding or molding this product, verify that these processes do not affect product quality by testing the performance of a cleaned, bonded or molded product in the intended equipment. Store the capacitors where the temperature and relative humidity do not exceed 5 to 40 degrees centigrade and 20 to 70%.
Use capacitors within 6 months after delivery.

FAILURE TO FOLLOW THE ABOVE CAUTIONS MAY RESULT, WORST CASE, IN A SHORT CIRCUIT AND CAUSE FUMING OR PARTIAL DISPERSION WHEN THE PRODUCT IS USED.

⚠Caution

■ ⚠Caution (Rating)

1. Operating Voltage

When DC-rated capacitors are to be used in AC or ripple current circuits, be sure to maintain the Vp-p value of the applied voltage or the V0-p which contains DC bias within the rated voltage range.
When the voltage is applied to the circuit, starting or stopping may generate irregular voltage for a transit period because of resonance or switching. Be sure to use a capacitor with a rated voltage range that includes these irregular voltages.

When DC-rated capacitors are to be used in input circuits from commercial power source (AC filter), be sure to use Safety Recognized Capacitors because various regulations on withstand voltage or impulse withstand established for all equipment should be taken into consideration.

Voltage	DC Voltage	DC+AC Voltage	AC Voltage	Pulse Voltage (1)	Pulse Voltage (2)
Positional Measurement	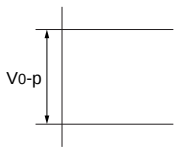	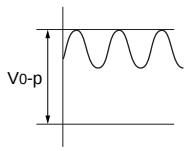	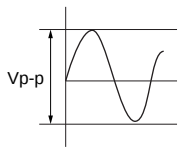	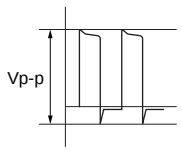	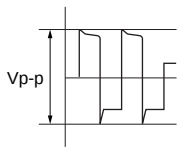

2. Operating Temperature and Self-generated Heat

Keep the surface temperature of a capacitor below the upper limit of its rated operating temperature range. Be sure to take into account the heat generated by the capacitor itself. When the capacitor is used in a high-frequency current, pulse current or similar current, it may have self-generated heat due to dielectric loss. In the case of "High Dielectric Constant Type Capacitors," applied voltage load should be such that self-generated heat is within 20 °C under the condition where the capacitor is subjected at an atmosphere temperature of 25 °C. Please contact us if self-generated heat occurs with "Temperature Compensating Type Capacitors".
When measuring, use a thermocouple of small thermal capacity -K of ø0.1mm under conditions where the capacitor is not affected by radiant heat from other components or wind from surroundings. Excessive heat may lead to deterioration of the capacitor's characteristics and reliability. Never attempt to perform measurement with the cooling fan running. Otherwise, accurate measurement cannot be ensured.

3. Fail-Safe

Be sure to provide an appropriate fail-safe function on your product to prevent a second damage that may be caused by the abnormal function or the failure of our product.

FAILURE TO FOLLOW THE ABOVE CAUTIONS MAY RESULT, WORST CASE, IN A SHORT CIRCUIT AND CAUSE FUMING OR PARTIAL DISPERSION WHEN THE PRODUCT IS USED.

⚠Caution

■ ⚠Caution (Soldering and Mounting)

1. Vibration and impact
   Do not expose a capacitor or its leads to excessive shock or vibration during use.
2. Soldering
   When soldering this product to a PCB/PWB, do not exceed the solder heat resistance specification of the capacitor. Subjecting this product to excessive heating could melt the internal junction solder and may result in thermal shocks that can crack the ceramic element.
3. Bonding, resin molding and coating
   In case of bonding, molding or coating this product, verify that these processes do not affect the quality of the capacitor by testing the performance of the bonded, molded or coated product in the intended equipment.
   In case the amount of application, dryness/ hardening conditions of adhesives and molding resins containing organic solvents (ethyl acetate, methyl ethyl ketone, toluene, etc.) are unsuitable, the outer coating resin of a capacitor may be damaged by the organic solvents and may result, worst case, in a short circuit.
   The variation in thickness of adhesive or molding resin or coating may cause an outer coating resin cracking and/or ceramic element cracking of a capacitor in a temperature cycling.
4. Treatment after bonding, resin molding and coating
   When the outer coating is hot (over 100 degrees centigrade) after soldering, it becomes soft and fragile, so please be careful not to give it mechanical stress.

FAILURE TO FOLLOW THE ABOVE CAUTIONS MAY RESULT, WORST CASE, IN A SHORT CIRCUIT AND CAUSE FUMING OR PARTIAL DISPERSION WHEN THE PRODUCT IS USED.

■ ⚠Caution (Handling)

Vibration and impact
Do not expose a capacitor or its leads to excessive shock or vibration during use.

FAILURE TO FOLLOW THE ABOVE CAUTIONS MAY RESULT, WORST CASE, IN A SHORT CIRCUIT AND CAUSE FUMING OR PARTIAL DISPERSION WHEN THE PRODUCT IS USED.

Notice

■ Notice (Rating)

Capacitance change of capacitor

In case of F/X7R/X7S/X7T/X8L/Y5V char.

Capacitors have an aging characteristic, whereby the capacitor continually decreases its capacitance slightly if the capacitor is left on for a long time. Moreover, capacitance might change greatly depending on the surrounding temperature or an applied voltage.

■ Notice (Soldering and Mounting)

1. Cleaning (ultrasonic cleaning)

To perform ultrasonic cleaning, observe the following conditions.

Rinse bath capacity: Output of 20 watts per liter or less.

Rinsing time: 5 min. maximum.

Do not vibrate the PCB/PWB directly.

Excessive ultrasonic cleaning may lead to fatigue destruction of the lead wires.

2. Soldering and Mounting

(1) Allowable Conditions for Soldering Temperature and Time

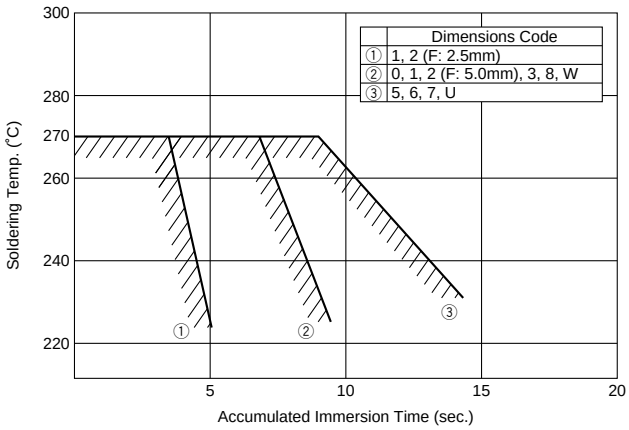

Perform soldering within tolerance range (shaded portion).

(2) Insertion of the Lead Wire

- When soldering, insert the lead wire into the PCB without mechanically stressing the lead wire.
- Insert the lead wire into the PCB with a distance appropriate to the lead space.

⚠Note:

1. Export Control
   <For customers outside Japan>
   No Murata products should be used or sold, through any channels, for use in the design, development, production, utilization, maintenance or operation of, or otherwise contribution to (1) any weapons (Weapons of Mass Destruction [nuclear, chemical or biological weapons or missiles] or conventional weapons) or (2) goods or systems specially designed or intended for military end-use or utilization by military end-users.
   <For customers in Japan>
   For products which are controlled items subject to the "Foreign Exchange and Foreign Trade Law" of Japan, the export license specified by the law is required for export.
2. Please contact our sales representatives or product engineers before using the products in this catalog for the applications listed below, which require especially high reliability for the prevention of defects which might directly damage a third party's life, body or property, or when one of our products is intended for use in applications other than those specified in this catalog.
   ① Aircraft equipment ② Aerospace equipment
   ③ Undersea equipment ④ Power plant equipment
   ⑤ Medical equipment ⑥ Transportation equipment (vehicles, trains, ships, etc.)
   ⑦ Traffic signal equipment ⑧ Disaster prevention / crime prevention equipment
   ⑨ Data-processing equipment ⑩ Application of similar complexity and/or reliability requirements to the applications listed above
3. Product specifications in this catalog are as of March 2011. They are subject to change or our products in it may be discontinued without advance notice. Please check with our sales representatives or product engineers before ordering. If there are any questions, please contact our sales representatives or product engineers.
4. Please read rating and ⚠CAUTION (for storage, operating, rating, soldering, mounting and handling) in this catalog to prevent smoking and/or burning, etc.
5. This catalog has only typical specifications because there is no space for detailed specifications. Therefore, please review our product specifications or consult the approval sheet for product specifications before ordering.
6. Please note that unless otherwise specified, we shall assume no responsibility whatsoever for any conflict or dispute that may occur in connection with the effect of our and/or a third party's intellectual property rights and other related rights in consideration of your use of our products and/or information described or contained in our catalogs. In this connection, no representation shall be made to the effect that any third parties are authorized to use the rights mentioned above under licenses without our consent.
7. No ozone depleting substances (ODS) under the Montreal Protocol are used in our manufacturing process.

Murata Manufacturing Co., Ltd.
http://www.murata.com/

Head Office
1-10-1, Higashi Kotari, Nagaokakyo-shi, Kyoto 617-8555, Japan
Phone: 81-75-951-9111

International Division
3-29-12, Shibuya, Shibuya-ku, Tokyo 150-0002, Japan
Phone: 81-3-5469-6123 Fax: 81-3-5469-6155 E-mail: intl@murata.co.jp