阅读申明

1.本站收集的数据手册和产品资料都来自互联网，版权归原作者所有。如读者和版权方有任何异议请及时告之，我们将妥善解决。
2.本站提供的中文数据手册是英文数据手册的中文翻译，其目的是协助用户阅读，该译文无法自动跟随原稿更新，同时也可能存在翻译上的不当。建议读者以英文原稿为参考以便获得更精准的信息。
3.本站提供的产品资料，来自厂商的技术支持或者使用者的心得体会等，其内容可能存在描叙上的差异，建议读者做出适当判断。
4.如需与我们联系，请发邮件到marketing@iczoom.com，主题请标有“数据手册”字样。

Read Statement

1. The datasheets and other product information on the site are all from network reference or other public materials, and the copyright belongs to the original author and original published source. If readers and copyright owners have any objections, please contact us and we will deal with it in a timely manner.

2. The Chinese datasheets provided on the website is a Chinese translation of the English datasheets. Its purpose is for reader’s learning exchange only and do not involve commercial purposes. The translation cannot be automatically updated with the original manuscript, and there may also be improper translations. Readers are advised to use the English manuscript as a reference for more accurate information.

3. All product information provided on the website refer to solutions from manufacturers’ technical support or users the contents may have differences in description, and readers are advised to take the original article as the standard.

4. If you have any questions, please contact us at marketing@iczoom.com and mark the subject with “Datasheets”.

Downloaded from www.iczoom.com

ITT Cannon is the foremost manufacturer of MS and MS type connectors with the widest range of connector styles, sizes and variations in the industry. These connectors utilize the finest materials, which, along with precision manufacturing and rigid quality control, assure ITT Cannon customers of the finest quality connectors. The MS A & B product line has environmentally safe green and black zinc alloy plating. The Black zinc plating is RoHS complaint. The plating is a high quality, uniform finish. The contact, which are preloaded in the insulator, have been redesigned such that the solder cups remain in the proper orientation and will not rotate during wiring termination. The contacts are machined for strength and durability and plated with silver. The Cannon MS A&B design meets the performance requirements of the MIL-C-5015. The product is available in all the popular sizes and configurations available in Class A (solid end bell) and Class B (split end bell) versions.

Applications:

- Industrial Controls
- Test Equipment
- Traffic Signals
- Bus Systems

Product Features and Benefits

- High strength aluminum alloy connector
- High strength plastic insulators
- Environmentally safe shell finishes
- Protected against corrosion
- High quality plating finish
- Threaded coupling
- Product is tooled and available in 50 insert patterns
- Machined contacts
- Low cost
- UL recognized

Performance Specifications

Temperature Range:	–55°C to 125°C (-67°F to 257°F)
Current Rating:	13 A to 150 A*
Durability:	500 mating cycles min.
Wire Accommodation:	0 to 20 AWG*
No. of Contacts:	2 to 48
Termination:	Solder

*Depending on contact size.

ELECTRICAL SERVICE DATA

Test current ratings of contacts and allowable voltage drop under test conditions when assembled as in service are shown below. Maximum total current to be carried per connector is the same as the allowable in wire bundles as specified in MIL-W-5088.

Contact Size	Test Current (amps)	Potential Drop (millivolts)
16	13	49
12	23	42
8	46	28
4	80	23
0	150	21

HIGH POTENTIAL TEST VOLTAGE

MS connectors show no evidence of breakdown with the test voltage given below is applied between the two closest contacts and between the shell and the contacts closest to the shell for a period of one minute.

MS Service Rating	Test Voltage (RMS) 60 cps	Suggested* Operating Voltages DC	AC (rms)	Air Spacing Nom. (inches)	Creepage Distance Nom. (inches)
Inst.	1000	250	200		1/16
A	2000	700	500	1/16	1/8
D	2800	1250	900	1/8	3/16
E	3500	1750	1250	3/16	1/4
B	4500	2450	1750	1/4	5/16
C	7000	4200	3000	5/16	1

*As indicated in previous MS Specification and to be used by designer only as a guide.

Materials and Finishes

Description	Material	Finish
Shell	Aluminum Alloy	Green Zinc Standard, Black Zinc (RoHS), OD CAD
Insulator	Hard Plastic	—
Contact	Brass or Copper Alloy	Silver

CA/MS 3100A wall mounting receptacles are used to carry wires through walls or bulkheads, or to provide the means of disconnection at a bulkhead. CA/MS 3100A receptacles mate with CA/MS 3106 and 3108 plugs.

CA/MS 3101A cable connecting receptacles are used for cable extension requirements where mounting provisions are unnecessary. CA/MS 3101A plugs mate with 3106A/B and 3108B connectors.

Note: The D revision of MIL-C-5015 has changed the nomenclature of the 3101 from receptacle to plugs.

CA/MS 3102A box mounted receptacles are used in junction boxes or as an integral part of equipment. CA/MS 3102A receptacles will mate with 3106 and 3108 plugs.

CA/MS 3106A straight plug utilizes a solid endbell. The CA/MS 3106A mates with 3100, 3101, and 3102 connectors

CA/MS 3106B is identical to the 3106A straight plug except it utilizes a split endbell. CA/MS 3106B mates with 3100, 3101, and 3102 connectors.

CA/MS 3108B 90° angle plugs are used where there is limited space ad where wires must be brought at abrupt angles. This plug will mate with 3100, 3101, and 3102 connectors.

How to Order

MS	3102	A	18-8	P	X	
CA	3106	B	18-8	P	X	*

Prefix
Shell Style
Class
Shell Size
Contact Arrangement
Contact Type
Alternate Insert Position
Modifications

SERIES PREFIX
MS – Complies with Military Specification MIL-C-5015
CA – Cannon prefix
CAR – RoHS Compliant (Black Zinc Only)

SHELL STYLE
3100 – Wall Mounting Receptacle (A version only)
3101 – Cable Connector Receptacle (A version only)
3102 – Box Mounting Receptacle
3106 – Straight Plug
3108 – 90° Angle Plug (B version only)

CLASS
A – Solid or one-piece endbell
B – Split or two-piece endbell

SHELL SIZE
Coupling thread diameter in sixteenths of an inch

CONTACT ARRANGEMENTS
Refer to page B-5

CONTACT TYPE
P – Pin
S – Socket

ALTERNATE INSERT POSITIONS
Refer to page 4

MODIFICATIONS
A206 (RoHS) Black Zinc Plating
Contact Cannon for other options.

For more information, please contact your local Cannon sales office.

Contact Cavity Arrangements

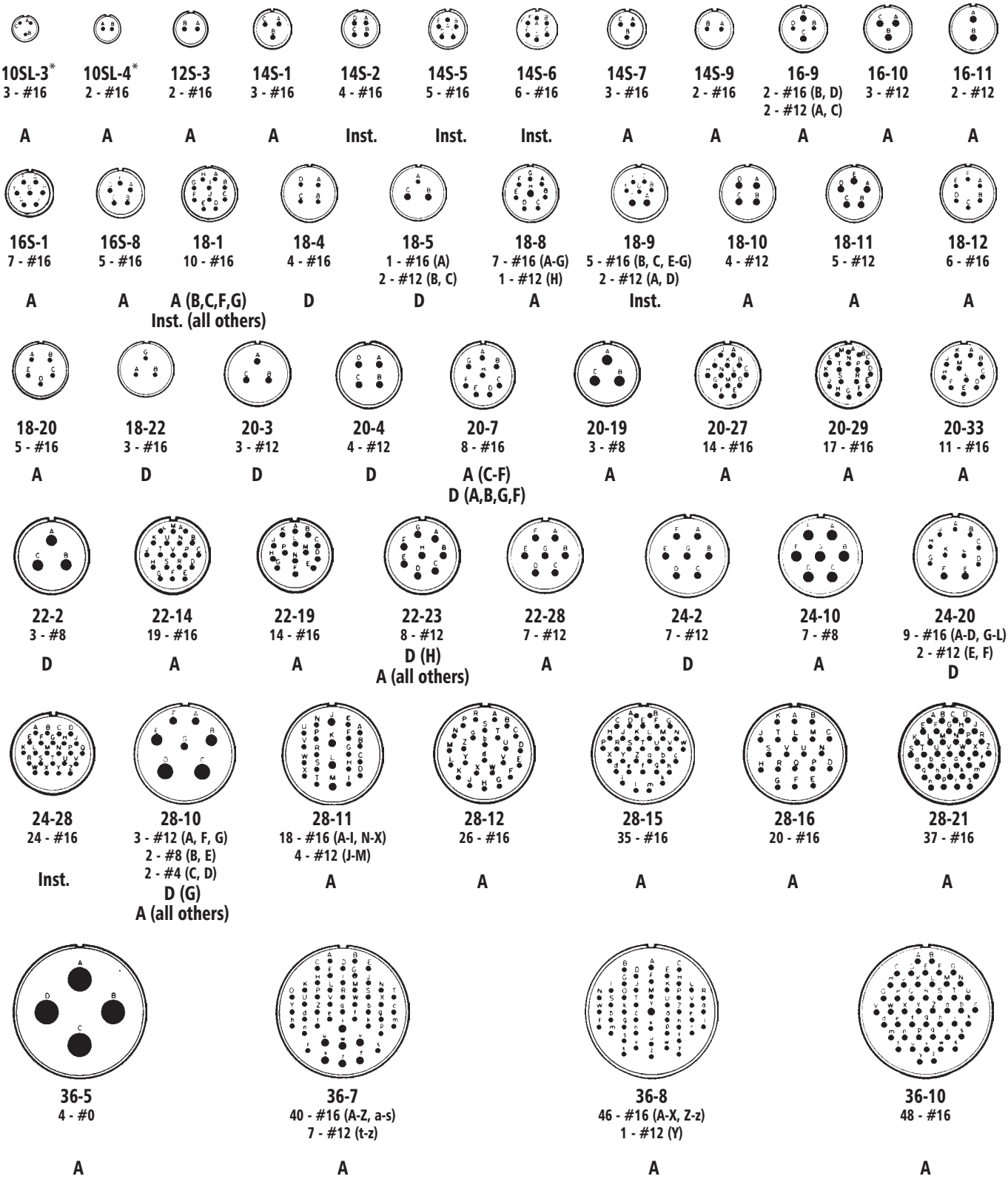

	10SL-3*	10SL-4*	12S-3	14S-1	14S-2	14S-5	14S-6	14S-7	14S-9	16-9	16-10	16-11
	3 - #16	2 - #16	2 - #16	3 - #16	4 - #16	5 - #16	6 - #16	3 - #16	2 - #16	2 - #16 (B, D) 2 - #12 (A, C)	3 - #12	2 - #12
Service Rating	A	A	A	A	Inst.	Inst.	Inst.	A	A	A	A	A

	16S-1	16S-8	18-1	18-4	18-5	18-8	18-9	18-10	18-11	18-12
	7 - #16	5 - #16	10 - #16	4 - #16	1 - #16 (A) 2 - #12 (B, C)	7 - #16 (A-G) 1 - #12 (H)	5 - #16 (B, C, E-G) 2 - #12 (A, D)	4 - #12	5 - #12	6 - #16
	A	A	A (B,C,F,G) Inst. (all others)	D	D	A	Inst.	A	A	A

	18-20	18-22	20-3	20-4	20-7	20-19	20-27	20-29	20-33
	5 - #16	3 - #16	3 - #12	4 - #12	8 - #16	3 - #8	14 - #16	17 - #16	11 - #16
	A	D	D	D	A (C-F) D (A,B,G,F)	A	A	A	A

	22-2	22-14	22-19	22-23	22-28	24-2	24-10	24-20
	3 - #8	19 - #16	14 - #16	8 - #12	7 - #12	7 - #12	7 - #8	9 - #16 (A-D, G-L) 2 - #12 (E, F)
	D	A	A	D (H) A (all others)	A	D	A	D

	24-28	28-10	28-11	28-12	28-15	28-16	28-21
	24 - #16	3 - #12 (A, F, G) 2 - #8 (B, E) 2 - #4 (C, D)	18 - #16 (A-I, N-X) 4 - #12 (J-M)	26 - #16	35 - #16	20 - #16	37 - #16
	Inst.	D (G) A (all others)	A	A	A	A	A

	36-5	36-7	36-8	36-10
	4 - #0	40 - #16 (A-Z, a-s) 7 - #12 (t-z)	46 - #16 (A-X, Z-z) 1 - #12 (Y)	48 - #16
	A	A	A	A

* 10SL is available in the following configurations only: 3100, 3101, 3102, pin contacts only and 3106 and 3108 socket contacts only

Dimensions shown in inches (mm)
Specifications and dimensions subject to change

Wall Mounting Receptacle - Solid Endbell

MS3100A

CA/CAR 3100A

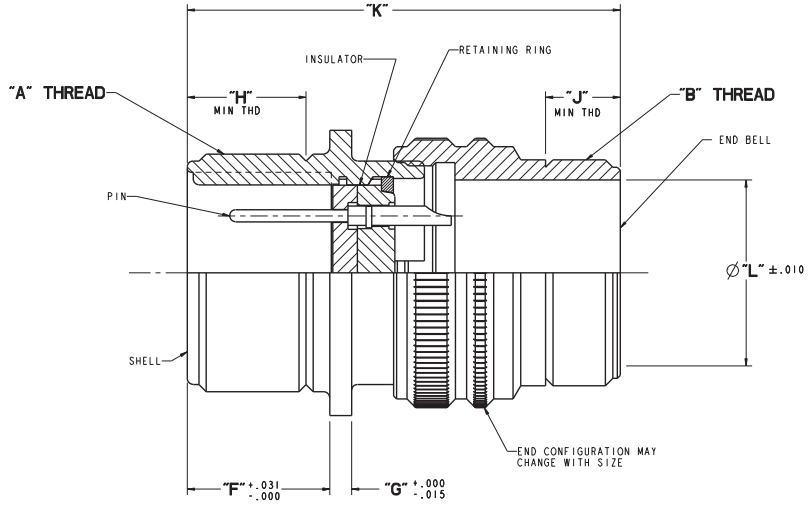

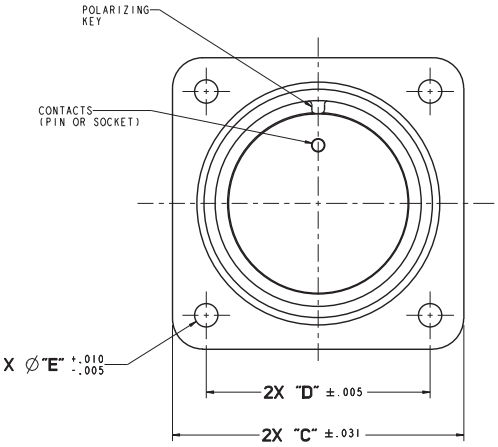

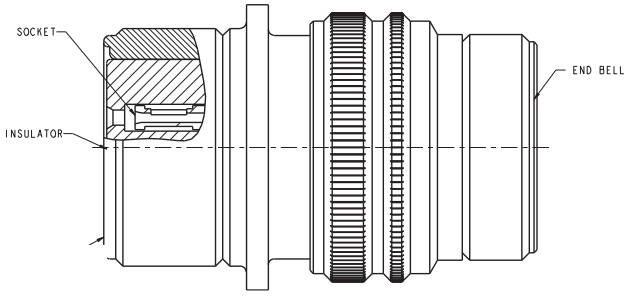

TABLE													
SIZE	ITT CANNON HARDWARE KIT NO. (GREEN ZINC)	ITT CANNON HARDWARE KIT NO. (BLACK ZINC)	"A" THREAD (CLASS: 2A)	"B" THREAD (CLASS: 2A)	"C"	"D"	"E"	"F"	"G"	"H"	"J"	"K"	Ø"L"
10SL*	002799-0000	002799-0001	5/8-24 UNEF	5/8-24 UNEF	1.000 (25.40)	.718 (18.24)	.120 (3.05)	.562 (14.30)	.093 (2.36)	.375 (9.53)	.354 (9.00)	1.625 (42.27)	.346 (8.79)
12S	002602-0000	002602-0001	3/4-20 UNEF	5/8-24 UNEF	1.094 (27.80)	.813 (20.65)	.120 (3.05)	.562 (14.30)	.093 (2.36)	.375 (9.53)	.393 (9.98)	1.655 (42.04)	.465 (11.81)
14S	002604-0000	002604-0001	7/8-20 UNEF	3/4-20 UNEF	1.188 (30.20)	.906 (23.00)	.120 (3.05)	.562 (14.30)	.093 (2.36)	.375 (9.53)	.354 (9.00)	1.705 (45.31)	.575 (14.61)
16S	002606-0000	002606-0001	1-20 UNEF	7/8-20 UNEF	1.281 (32.50)	.969 (24.60)	.120 (3.05)	.562 (14.30)	.093 (2.36)	.375 (9.53)	.374 (9.50)	1.775 (45.09)	.669 (17.00)
12	002603-0000	002603-0001	3/4-20 UNEF	5/8-24 UNEF	1.094 (27.80)	.813 (20.65)	.120 (3.05)	.750 (19.10)	.093 (2.36)	.625 (15.88)	.393 (9.98)	1.845 (46.86)	.465 (11.81)
14	002605-0000	002605-0001	7/8-20 UNEF	3/4-20 UNEF	1.188 (30.20)	.906 (23.00)	.120 (3.05)	.750 (19.10)	.093 (2.36)	.625 (15.88)	.354 (9.00)	1.885 (47.88)	.575 (14.61)
16	002607-0000	002607-0002	1-20 UNEF	7/8-20 UNEF	1.281 (32.50)	.969 (24.60)	.120 (3.05)	.750 (19.10)	.093 (2.36)	.625 (15.88)	.374 (9.50)	1.965 (49.91)	.669 (17.00)
18	002608-0000	002607-0001	1 1/8-18 UNEF	1-20 UNEF	1.375 (35.00)	1.062 (27.00)	.120 (3.05)	.750 (19.10)	.115 (2.92)	.625 (15.88)	.374 (9.50)	2.035 (51.69)	.807 (20.50)
20	002609-0000	002609-0001	1 1/4-18 UNEF	1 3/16-18 UNEF	1.500 (38.10)	1.152 (29.36)	.120 (3.05)	.750 (19.10)	.115 (2.92)	.625 (15.88)	.393 (9.98)	2.245 (57.02)	.978 (20.50)
22	002610-0000	002610-0001	1 3/8-18 UNEF	1 3/16-18 UNEF	1.625 (41.30)	1.250 (31.75)	.120 (3.05)	.750 (19.10)	.115 (2.92)	.625 (15.88)	.393 (9.98)	2.185 (55.50)	.980 (24.89)
24	002611-0000	002611-0001	1 1/2-18 UNEF	1 7/16-18 UNEF	1.750 (44.45)	1.375 (31.90)	.147 (3.74)	.812 (20.63)	.115 (2.92)	.625 (15.88)	.393 (9.98)	2.285 (58.04)	1.220 (31.00)
28	002612-0000	002611-0001	1 3/4-18 UNS	1 7/16-18 UNEF	2.000 (50.80)	1.562 (39.70)	.147 (3.74)	.812 (20.63)	.115 (2.92)	.625 (15.88)	.394 (10.00)	2.245 (57.02)	1.114 (28.30)
32	002613-0000	002613-0001	2-18 UNS	1 3/4-18 UNS	2.250 (57.15)	1.750 (44.45)	.173 (4.40)	.875 (22.23)	.166 (4.21)	.625 (15.88)	.453 (11.50)	2.275 (57.79)	1.425 (36.20)
36	002614-0000	002614-0001	2 1/4-16 UN	2-18 UNS	2.500 (63.50)	1.937 (49.20)	.173 (4.40)	.875 (22.23)	.166 (4.21)	.625 (15.88)	.492 (12.50)	2.485 (63.12)	1.772 (45.00)

* 10SL is available in the following configurations only: 3100, 3101, 3102, pin contacts only and 3106 and 3108 socket contacts only

Cable Connecting Receptacle - Solid Endbell

MS3101A

CA/CAR 3101A

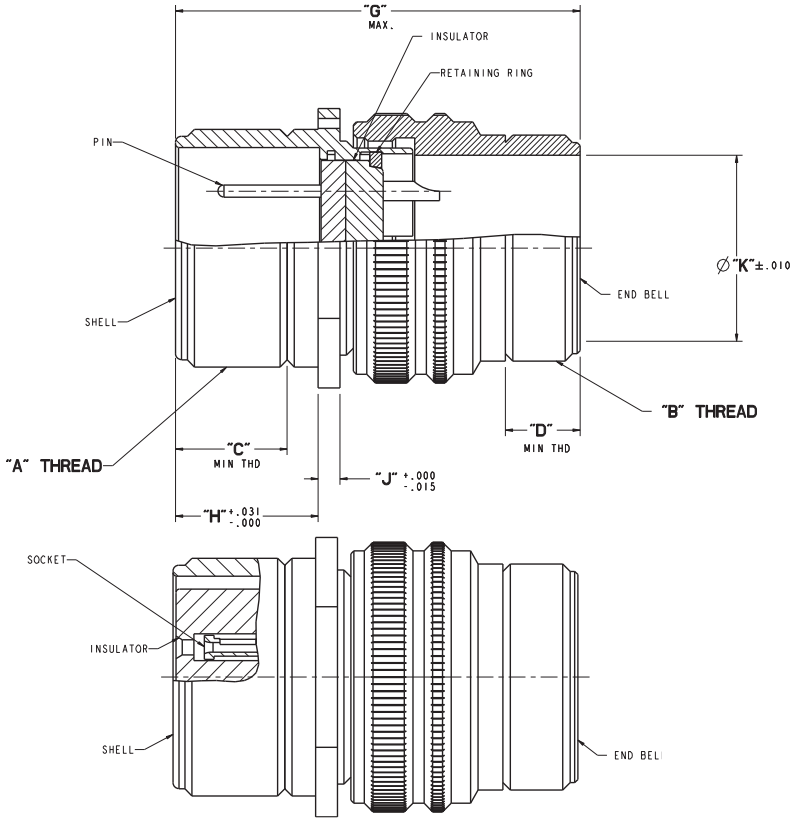

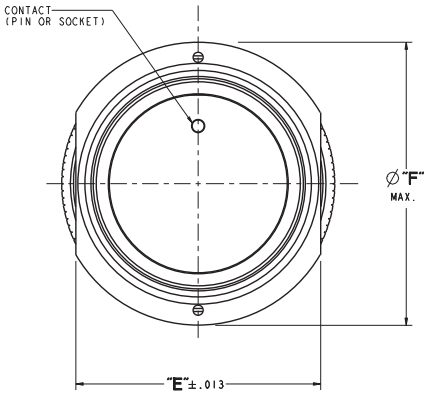

TABLE												
SIZE	ITT CANNON HARDWARE KIT NO. (GREEN ZINC)	ITT CANNON HARDWARE KIT NO. (BLACK ZINC)	"A" THREAD (CLASS: 2A)	"B" THREAD (CLASS: 2A)	"C"	"D"	"E"	Ø"F"	"G"	"H"	"J"	Ø"K"
10SL*	030922-0000	030922-0001	5/8-24 UNEF	5/8-24 UNEF	.375 (9.53)	.354 (9.00)	.771 (19.58)	.969 (24.61)	1.531 (38.89)	.562 (14.30)	.093 (2.36)	.346 (8.79)
12S	030923-0000	030923-0001	3/4-20 UNEF	5/8-24 UNEF	.375 (9.53)	.393 (9.98)	.771 (19.58)	1.062 (26.77)	1.688 (42.88)	.562 (14.30)	.093 (2.36)	.465 (11.81)
14S	030925-0000	030925-0001	7/8-20 UNEF	3/4-20 UNEF	.375 (9.53)	.354 (9.00)	.898 (22.80)	1.156 (29.36)	1.688 (42.88)	.562 (14.30)	.093 (2.36)	.575 (14.61)
16S	030927-0000	030927-0001	1-20 UNEF	7/8-20 UNEF	.375 (9.53)	.374 (9.50)	1.021 (25.93)	1.250 (31.75)	1.688 (42.88)	.562 (14.30)	.093 (2.36)	.669 (17.00)
12	030924-0000	030924-0001	3/4-20 UNEF	5/8-24 UNEF	.625 (15.88)	.393 (9.98)	.771 (19.58)	1.062 (26.97)	2.062 (52.37)	.750 (19.10)	.093 (2.36)	.465 (11.81)
14	030926-0000	030924-0001	7/8-20 UNEF	3/4-20 UNEF	.625 (15.88)	.354 (9.00)	.898 (22.80)	1.156 (29.36)	2.062 (52.37)	.750 (19.10)	.093 (2.36)	.575 (14.61)
16	030928-0000	030928-0002	1-20 UNEF	7/8-20 UNEF	.625 (15.88)	.374 (9.50)	1.021 (25.93)	1.250 (31.75)	2.062 (52.37)	.750 (19.10)	.093 (2.36)	.669 (17.00)
18	030929-0000	030929-0001	1 1/8-18 UNEF	1-20 UNEF	.625 (15.88)	.374 (9.50)	1.145 (29.08)	1.344 (34.13)	2.062 (52.37)	.750 (19.10)	.115 (2.92)	.807 (20.50)
20	030930-0000	030930-0001	1 1/4-18 UNEF	1 3/16-18 UNEF	.625 (15.88)	.393 (9.98)	1.270 (32.25)	1.469 (37.30)	2.188 (55.58)	.750 (19.10)	.115 (2.92)	.978 (20.50)
22	030931-0000	030931-0001	1 3/8-18 UNEF	1 3/16-18 UNEF	.625 (15.88)	.393 (9.98)	1.395 (35.43)	1.594 (40.50)	2.188 (55.58)	.750 (19.10)	.115 (2.92)	.980 (24.89)
24	030932-0000	030932-0001	1 1/2-18 UNEF	1 7/16-18 UNEF	.625 (15.88)	.393 (9.98)	1.520 (38.60)	1.719 (43.66)	2.312 (58.72)	.812 (20.63)	.115 (2.92)	1.220 (31.00)
28	030933-0000	030933-0001	1 3/4-18 UNS	1 7/16-18 UNEF	.625 (15.88)	.394 (10.00)	1.770 (45.00)	1.969 (50.00)	2.312 (58.72)	.812 (20.63)	.115 (2.92)	1.114 (28.30)
32	030934-0000	030934-0001	2-18 UNS	1 3/4-18 UNS	.625 (15.88)	.453 (11.50)	2.020 (51.30)	2.219 (56.36)	2.438 (61.93)	.875 (22.23)	.166 (4.21)	1.425 (36.20)
36	030935-0000	030935-0001	2 1/4-16 UN	2-18 UNS	.625 (15.88)	.492 (12.50)	2.270 (57.65)	2.469 (62.70)	2.438 (61.93)	.875 (22.23)	.166 (4.21)	1.772 (45.00)

* 10SL is available in the following configurations only: 3100, 3101, 3102, pin contacts only and 3106 and 3108 socket contacts only

Dimensions shown in inches (mm)
Specifications and dimensions subject to change

Box Mounting Receptacle

MS3102A

CA/CAR 3102A

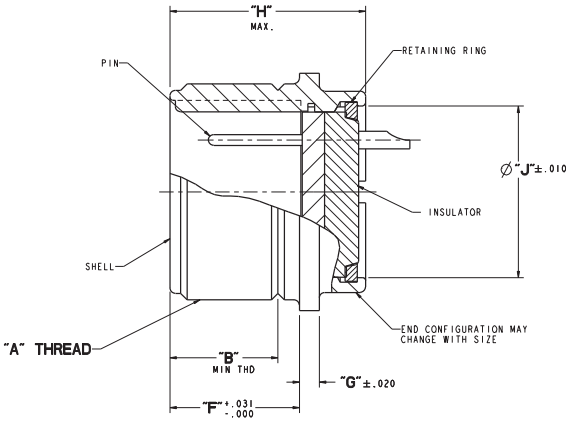

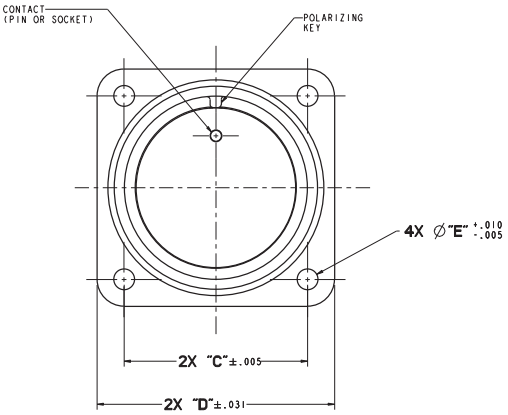

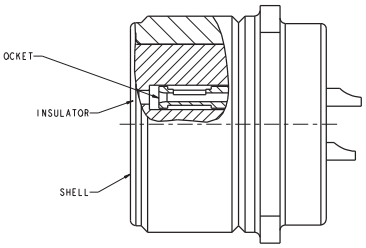

TABLE											
SIZE	ITT CANNON HARDWARE KIT NO. (GREEN ZINC)	ITT CANNON HARDWARE KIT NO. (BLACK ZINC)	"A" THREAD (CLASS: 2A)	"B"	"C"	"D"	∅"E"	"F"	"G"	"H"	∅"J"
10SL*	248-0112-021	248-0112-022	5/8-24 UNEF	.375 (9.53)	.718 (18.24)	1.000 (25.40)	.120 (3.05)	.562 (14.30)	.093 (2.36)	.938 (23.83)	.389 (9.88)
12S	248-0091-027	248-0091-028	3/4-20 UNEF	.375 (9.53)	.813 (20.65)	1.094 (27.80)	.120 (3.05)	.562 (14.30)	.093 (2.36)	.955 (24.26)	.517 (13.13)
14S	248-0093-051	248-0093-052	7/8-20 UNEF	.375 (9.53)	.906 (23.00)	1.188 (30.20)	.120 (3.05)	.562 (14.30)	.093 (2.36)	.955 (24.26)	.597 (15.16)
16S	248-0095-038	248-0095-039	1-20 UNEF	.375 (9.53)	.969 (24.60)	1.281 (32.50)	.120 (3.05)	.562 (14.30)	.093 (2.36)	.955 (24.26)	.719 (18.26)
12	248-0090-009	248-0090-010	3/4-20 UNEF	.625 (15.88)	.813 (20.65)	1.094 (27.80)	.120 (3.05)	.750 (19.10)	.093 (2.36)	1.143 (29.03)	.517 (13.13)
14	248-0092-011	248-0092-012	7/8-20 UNEF	.625 (15.88)	.906 (23.00)	1.188 (30.20)	.120 (3.05)	.750 (19.10)	.093 (2.36)	1.143 (29.03)	.597 (15.16)
16	248-0094-023	248-0094-024	1-20 UNEF	.625 (15.88)	.969 (24.60)	1.281 (32.50)	.120 (3.05)	.750 (19.10)	.093 (2.36)	1.143 (29.03)	.719 (18.26)
18	248--0096-042	248--0096-043	1 1/8-18 UNEF	.625 (15.88)	1.062 (27.00)	1.375 (35.00)	.120 (3.05)	.750 (19.10)	.115 (2.92)	1.143 (29.03)	.839 (21.31)
20	248-0097-033	248-0097-034	1 1/4-18 UNEF	.625 (15.88)	1.156 (29.36)	1.500 (38.10)	.120 (3.05)	.750 (19.10)	.115 (2.92)	1.149 (29.18)	.994 (25.25)
22	248-0098-040	248-0098-041	1 3/8-18 UNEF	.625 (15.88)	1.250 (31.75)	1.625 (41.30)	.120 (3.05)	.750 (19.10)	.115 (2.92)	1.149 (29.03)	1.089 (27.66)
24	248-0099-032	248-0099-033	1 1/2-18 UNEF	.625 (15.88)	1.375 (31.90)	1.750 (44.45)	.147 (3.74)	.812 (20.63)	.115 (2.92)	1.305 (33.015)	1.216 (30.84)
28	248-0100-039	248-0100-040	1 3/4-18 UNS	.625 (15.88)	1.562 (39.70)	2.000 (50.80)	.147 (3.74)	.812 (20.63)	.115 (2.92)	1.305 (33.15)	1.436 (36047)
32	248-0101-023	248-0101-025	2-18 UNS	.625 (15.88)	1.750 (44.45)	2.250 (57.15)	.173 (4.40)	.875 (22.23)	.166 (4.21)	1.305 (33.15)	1.686 (42.82)
36	248-0102-025	248-0102-026	2 1/4-16 UN	.625 (15.88)	1.937 (49.20)	2.500 (63.50)	.173 (4.40)	.875 (22.23)	.166 (4.21)	1.305 (33.15)	1.901 (48.29)

* 10SL is available in the following configurations only: 3100, 3101, 3102, pin contacts only and 3106 and 3108 socket contacts only

Straight Plug - Solid Endbell

MS3106A CA/CAR 3106A

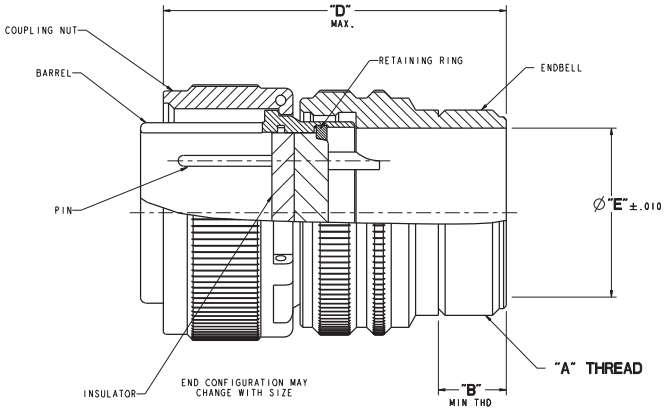

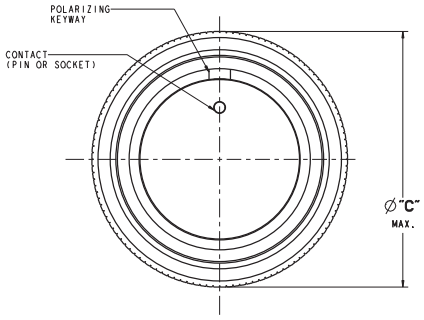

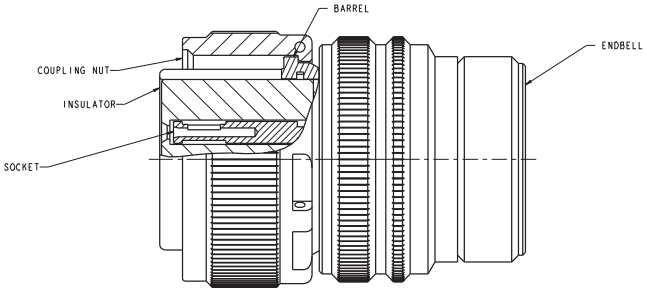

TABLE							
SIZE	ITT CANNON HARDWARE KIT NO. (GREEN ZINC)	ITT CANNON HARDWARE KIT NO. (BLACK ZINC)	"A" THREAD (CLASS: 2A)	"B"	Ø"C"	"D"	Ø"E"
10SL*	030903-0000	030903-0002	5/8-24 UNEF	.375 (9.53)	.969 (24.61)	1.531 (38.89)	.346 (8.79)
12S	030904-0000	030904-0001	5/8-24 UNEF	.375 (9.53)	1.062 (26.97)	1.688 (42.88)	.465 (11.81)
14S	030906-0000	030906-0002	3/4-20 UNEF	.375 (9.53)	1.156 (29.36)	1.688 (42.88)	.575 (14.61)
16S	030908-0000	030908-0001	7/8-20 UNEF	.375 (9.53)	1.250 (31.75)	1.688 (42.88)	.669 (17.00)
12	030905-0000	030905-0001	5/8-24 UNEF	.375 (9.53)	1.062 (26.97)	2.062 (52.37)	.465 (11.81)
14	030907-0000	030907-0001	3/4-20 UNEF	.375 (9.53)	1.156 (29.36)	2.062 (52.37)	.575 (14.61)
16	030909-0000	030909-0001	7/8-20 UNEF	.375 (9.53)	1.250 (31.75)	2.062 (52.37)	.669 (17.00)
18	030910-0000	030910-0002	1-20 UNEF	.375 (9.53)	1.344 (34.14)	2.062 (52.37)	.807 (20.50)
20	030911-0000	030911-0003	1 3/16-18 UNEF	.375 (9.53)	1.469 (37.31)	2.188 (55.58)	.978 (20.50)
22	030912-0000	030912-0002	1 3/16-18 UNEF	.375 (9.53)	1.594 (40.49)	2.188 (55.58)	.980 (24.89)
24	030913-0000	030913-0002	1 7/16-18 UNEF	.375 (9.53)	1.719 (43.66)	2.312 (58.72)	1.220 (31.00)
28	030914-0000	030914-0003	1 7/16-18 UNEF	.375 (9.53)	1.969 (50.01)	2.312 (58.72)	1.114 (28.30)
32	030915-0000	030915-0002	1 3/4-18 UNS	.438 (11.13)	2.219 (56.36)	2.438 (61.93)	1.425 (36.20)
36	030916-0000	030916-0002	2-18 UNS	.500 (12.70)	2.469 (62.71)	2.438 (61.93)	1.772 (45.00)

* 10SL is available in the following configurations only: 3100, 3101, 3102, pin contacts only and 3106 and 3108 socket contacts only

Dimensions shown in inches (mm)
Specifications and dimensions subject to change

Straight Plug - Split Endbell

MS3106B

CA/CAR 3106B

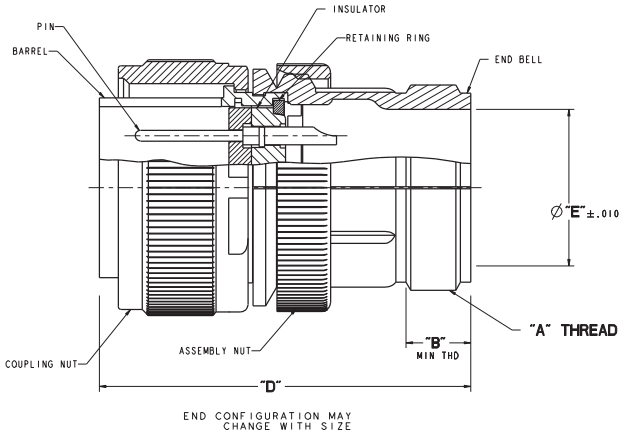

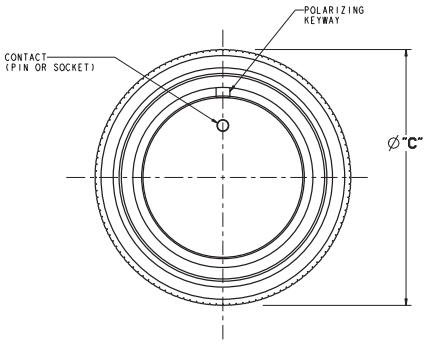

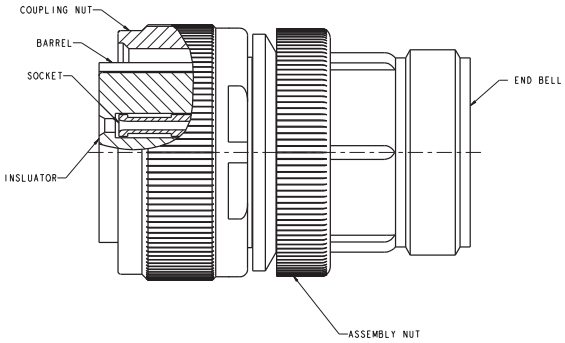

TABLE							
SIZE	ITT CANNON HARDWARE KIT NO. (GREEN ZINC)	ITT CANNON HARDWARE KIT NO. (BLACK ZINC)	"A" THREAD (CLASS: 2A)	"B"	Ø"C"	"D"	Ø"E"
10SL*	002778-0001	002778-0002	5/8-24 UNEF	.751 (19.07)	.969 (24.61)	1.531 (38.89)	.438 (11.13)
12S	002779-0000	002779-0002	5/8-24 UNEF	.751 (19.07)	1.034 (26.26)	1.688 (42.88)	.379 (9.62)
14S	002781-0000	002781-0003	3/4-20 UNEF	.736 (18.69)	1.138 (28.90)	1.688 (42.88)	.489 (12.42)
16S	002783-0000	002783-0003	7/8-20 UNEF	.744 (18.89)	1.256 (31.90)	1.688 (42.88)	.615 (15.62)
12	002780-0000	002780-0001	5/8-24 UNEF	.751 (19.07)	1.034 (26.26)	2.062 (52.37)	.379 (9.62)
14	002782-0000	002782-0001	3/4-20 UNEF	.736 (18.69)	1.138 (28.90)	2.062 (52.37)	.489 (12.42)
16	002784-0000	002784-0002	7/8-20 UNEF	.744 (18.89)	1.256 (31.90)	2.062 (52.37)	.615 (15.62)
18	002785-0000	002785-0003	1-20 UNEF	.909 (23.08)	1.331 (33.80)	2.062 (52.37)	.802 (20.37)
20	002786-0000	002786-0003	1 3/16-18 UNEF	1.032 (26.31)	1.479 (37.56)	2.188 (55.58)	.906 (23.01)
22	002787-0000	002787-0003	1 3/16-18 UNEF	.984 (24.99)	1.609 (40.86)	2.188 (55.58)	.906 (23.01)
24	002788-0000	002788-0003	1 7/16-18 UNEF	1.150 (29.21)	1.721 (43.71)	2.312 (58.72)	1.180 (29.97)
28	002789-0000	002789-0003	1 7/16-18 UNEF	1.150 (29.21)	1.997 (50.72)	2.312 (58.72)	1.164 (29.56)
32	002790-0000	002790-0002	1 3/4-18 UNS	1.209 (30.70)	2.252 (57.20)	2.438 (61.93)	1.489 (42.32)
36	002791-0000	002791-0002	2-18 UNS	1.281 (32.53)	2.496 (63.39)	2.438 (61.93)	1.666 (42.32)

* 10SL is available in the following configurations only: 3100, 3101, 3102, pin contacts only and 3106 and 3108 socket contacts only

90° Angle Plug - Split Endbell

MS3108B CA/CAR 3108B

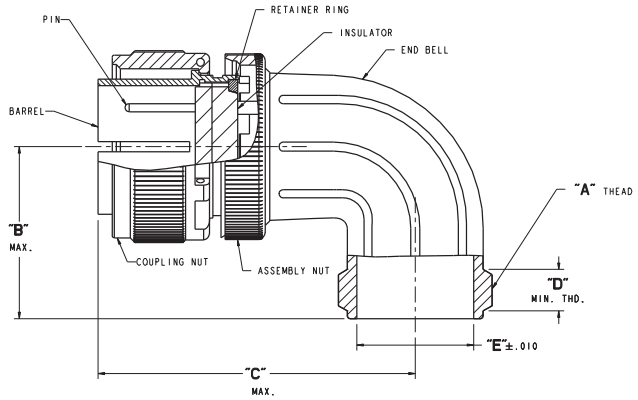

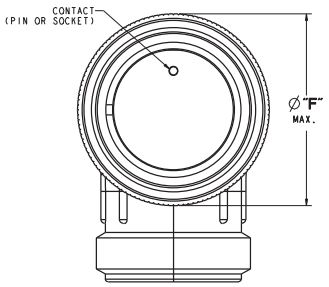

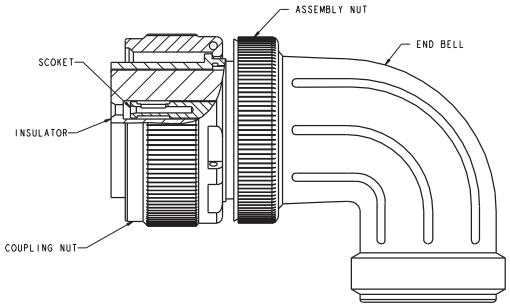

TABLE								
SIZE	ITT CANNON HARDWARE KIT NO. (GREEN ZINC)	ITT CANNON HARDWARE KIT NO. (BLACK ZINC)	"A" THREAD (CLASS: 2A)	"B"	"C"	"D"	"E"	"F"
10SL*	002756-0001	002756-0002	5/8-24 UNEF	1.00 (25.40)	1.500 (38.10)	.375 (9.53)	.25 (6.35)	.969 (24.61)
12S	002757-0000	002757-0001	5/8-24 UNEF	1.063 (27.00)	1.688 (42.86)	.375 (9.53)	.344 (8.74)	1.062 (26.94)
14S	002759-0000	002759-0002	3/4-20 UNEF	1.125 (28.57)	1.75 (44.45)	.375 (9.53)	.469 (11.91)	1.156 (29.36)
16S	002761-0000	002761-0002	7/8-20 UNEF	1.188 (30.17)	1.938 (49.23)	.375 (9.53)	.594 (15.08)	1.25 (31.75)
12	002758-0000	002758-0001	5/8-24 UNEF	1.063 (27.00)	1.938 (49.23)	.375 (9.53)	.344 (8.74)	1.062 (26.94)
14	002760-0000	002760-0001	3/4-20 UNEF	1.125 (28.57)	1.938 (49.23)	.375 (9.53)	.469 (11.91)	1.156 (29.36)
16	002762-0000	002762-0001	7/8-20 UNEF	1.188 (30.17)	2.125 (53.98)	.375 (9.53)	.594 (15.08)	1.25 (31.75)
18	002763-0000	002763-0002	1-20 UNEF	1.313 (33.35)	2.188 (55.58)	.375 (9.53)	.719 (18.26)	1.344 (34.14)
20	002764-0000	002764-0002	1 3/16-18 UNEF	1.375 (34.93)	2.438 (61.93)	.375 (9.53)	.875 (22.25)	1.469 (37.31)
22	002765-0000	002765-0002	1 3/16-18 UNEF	1.375 (34.93)	2.438 (61.93)	.375 (9.53)	.875 (22.25)	1.594 (40.49)
24	002766-0000	002766-0002	1 7/16-18 UNEF	1.563 (39.70)	2.688 (68.28)	.375 (9.53)	1.094 (27.78)	1.719 (43.6)
28	002767-0000	002767-0002	1 7/16-18 UNEF	1.563 (39.70)	2.688 (68.28)	.375 (9.53)	1.094 (27.78)	1.969 (50.01)
32	002768-0000	002768-0001	1 3/4-18 UNS	1.875 (47.63)	2.875 (73.03)	.438 (11.13)	1.375 (34.93)	2.219 (56.36)
36	002769-0000	002769-0002	2 -18 UNS	2.063 (52.40)	2.938 (74.63)	.500 (12.70)	1.625 (41.28)	2.469 (62.71)

* 10SL is available in the following configurations only: 3100, 3101, 3102, pin contacts only and 3106 and 3108 socket contacts only

Dimensions shown in inches (mm)
Specifications and dimensions subject to change

Alternate Insert Positions

Pin front view: Shell rotation

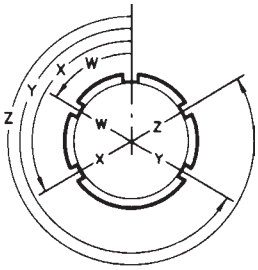

Contact Arrangement	W°	X°	Y°	Z°
10SL-3	—	—	—	—
10SL-4	—	—	—	—
12S-3	70	145	215	290
14S-1	—	—	—	—
14S-2	—	120	240	—
14S-5	—	110	—	—
14S-6	—	—	—	—
14S-7	90	180	270	—

Contact Arrangement	W°	X°	Y°	Z°
14S-9	70	145	215	290
16-9	35	110	250	325
16-10	90	180	270	—
16-11	35	110	250	325
16S-1	80	—	—	280
16S-8	—	170	265	—
18-1	70	145	215	290
18-4	35	110	250	325
18-5	80	110	250	280
18-8	70	—	—	290
18-9	80	110	250	280
18-10	—	120	240	—
18-11	—	170	265	—
18-12	80	—	—	280
18-20	90	180	270	—
18-22	70	145	215	290
20-3	70	145	215	290
20-4	45	110	250	—
20-7	80	110	250	280
20-19	90	180	270	—
20-27	35	110	250	325

Contact Arrangement	W°	X°	Y°	Z°
20-29	80	—	—	280
20-33	35	110	256	325
22-2	70	145	215	290
22-14	80	—	—	280
22-19	80	110	250	280
22-23	35	—	250	—
22-28	80	—	—	280
24-2	80	—	—	280
24-10	80	—	—	280
24-20	80	110	250	280
24-28	80	110	250	280
28-10	80	110	250	280
28-11	80	110	250	280
28-12	90	180	270	—
28-15	80	110	250	280
28-16	80	110	250	280
28-21	80	110	250	280
36-5	—	120	240	—
36-7	80	110	250	280
36-8	80	110	250	280
36-10	80	125	235	280

Accessories

Cable clamps are available in both the environmentally safe green zinc and black zinc, and will accommodate shell sizes 10SL-36. Double clamping action provides a balanced, positive hold on the wires and greatly reduces moisture transmission, a real benefit in applications that require environmental sealing. This clamp is provided with the bushing.

Shell Size	Part Number Green Zinc	Part Number Black Zinc RoHS compliant
10SL, 12S	CA17711-111	CA17711-103
14S	CA17711-112	CA17711-104
16S, 16	CA17711-113	CA17711-101
18	CA17711-114	CA17711-102
20, 22	CA17711-115	CA17711-22
24, 28	CA17711-116	CA17711-105
32	CA17711-117	CA17711-106
36	CA17711-118	CA17711-107

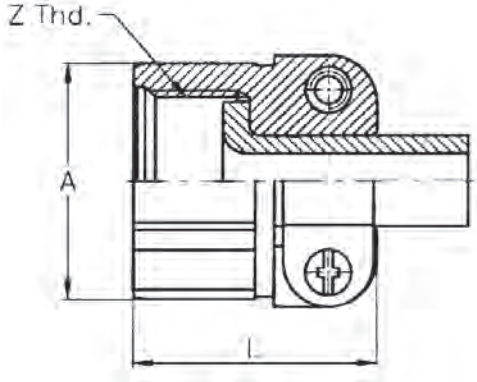

Size	A	L	Z	Green Zinc	Black Zinc RoHS compliant	Cadmium
4A	.811 (20.60)	.811 (20.60)	5/8-24INEF-2B	995-0002-558	995-0002-280	995-0002-550
6A	.969 (24.60)	.969 (24.60)	3/4-20UNEF-2B	995-0002-559	995-0002-281	995-0002-551
8A	1.094 (27.80)	1.094 (27.80)	7/8-20UNEF-2B	995-0002-560	995-0002-282	995-0002-552
10A	1.89 (30.20)	1.89 (30.20)	1-20UNEF-2B	995-0002-561	995-0002-283	995-0002-553
12A	1.378 (35.00)	1.378 (35.00)	13/16-18UNEF-2B	995-0002-562	995-0002-284	995-0002-554
16A	1.693 (43.00)	1.693 (43.00)	17/16-18UNEF-2B	995-0002-563	995-0002-285	995-0002-555
20A	2.031 (51.60)	2.031 (51.60)	1-3/4-18UNS-2B	995-0002-564	995-0002-286	995-0002-556
24A	2.220 (56.40)	2.220 (56.40)	2-18UNS-2B	995-0002-565	995-0002-287	995-0002-557

Metal Protective Caps

For more information on protective caps contact Interconnect Solutions Sales Offices.

Dimensions shown in inches (mm)
Specifications and dimensions subject to change

ITT Cannon is the foremost manufacturer of MS and MS type connectors with the widest range of connector styles, sizes and variations in the industry. These connectors utilize the finest materials, which, along with precision manufacturing and rigid quality control, assure ITT Cannon customers of the finest quality connectors.
These circular connectors were originally designed for aircraft, but are now widely used in many other fields. They are particularly suitable for commercial applications requiring low cost and high reliability.

ENVIRONMENTAL RESISTANT MS-E, MS-F, MS-R, AND F80 (Solder/Crimp Termination)
MS-E, MS-F and MS-R are similar to MS-A and MS-B connectors but have resilient insulators and wire sealing grommets for extreme environmental conditions and high altitude sealing. MS-E's and MS-F's have a mechanical cable clamp; the MS-R has a shorter, lighter weight endbell without the cable clamp. Both the MS-F and MS-R have O rings to supplement the interfacial seal. Shells are aluminum alloy. Contacts are silver plated copper alloy. The F80 modification (crimp contact termination) is available in E, R, F and BFR styles with resilient insulators.

POTTING ER CONNECTORS (Solder Contact Termination)

These Lightweight potting connectors provide resistance to salt water, fuels, etc., and will withstand the effects of high vibration. 3100 and 3106 connectors with plastic potting cups and resilient inserts meet the requirements of MS3103 and MS25183. Contacts are silver plated copper or brass. ER insulators are resilient; shells are aluminum alloy. A 90° plug (3108ER) is also available.

ACCESSORIES
Accessories to fit fit MS connectors include junction shells, protective caps, dummy or stowage receptacles, cable clamps, telescoping bushings.

How to Order

In the latest revision of MIL-C-5015, a new class of environment-resistant connectors was added. This new class F connector supersedes the previous class E connector. The MS3106F has an O ring under the coupling nut. The class E will be available upon request for existing programs, and upon ordering will also bear the E nomenclature on the shell.
MS-F and MS-R connectors are designed to operate in the extreme environmental conditions of high altitude flight and must be completely sealed to withstand moisture, condensation, vibration, corona and flashover caused by high altitude environments. They have resilient grommet with internal restrictions in the wire cavities which act as O rings around the wires. This allows the wires to slide thru the grommet with a minimum of friction, yet when the ferrule is seated and the endbell tightened it provides a perfect wire seal thru a wide variety of wire diameters. This seal at the rear, plus the interfacial seal at the front, effects a completely environment-resistant assembly when the plug is mated to and F or R receptacle. Sockets are of the closed-entry type.
The temperature range for this connector is -55°C (67°F) to +125° (+257°F) and meets the requirements of MIL-C-5015.
The F80 modification (crimp contact termination) is available in resilient insulators in the E, R, F, and BFR styles, creating a large selection of insert assemblies and hardware. Components are identical to the MS-5015 except that the contacts are modified for crimp termination providing and inexpensive crimp contact connector with the proven reliability of and complete intermateability with the MS-5015 series. Cable clamps have been integrally designed with the endbell on MS-E and MS-F connectors. Class R is without the cable clamp.

MS	3106	R	18	-	1	P	W	*
CA	3106	F	18	-	1	S	-	F80*

PREFIX
SHELL STYLE
CLASS
SHELL SIZE
CONTACT ARRANGEMENT
CONTACT TYPE
ALTERNATE INSERT POSITION
MODIFICATION CODE

PREFIX
MS - Conforms to latest MIL-C-5015 revision.
CA - Cannon designation (for any modification)
CAR - RoHS compliant

SHELL STYLE
3100 - Wall mounting receptacle
3101 - Cable connecting plug
3102 - Box mounting receptacle
3106 - Straight plug
3108 - 90° angle plug

CLASS
E - with resilient insulator and integral clamp for cable strain relief
F - same as E, however style 3106 with O-ring seal under the coupling nut

* When ordering MS3106F to the Cannon part number, designate CA06R.

SHELL SIZE
10S, 12S, 14S, 16S, 16, 18, 20, 22, 24, 28, 32 and 36.

CONTACT ARRANGEMENTS
See pages A-85 to A-89

CONTACT TYPE
P - Pin
S - Socket

ALTERNATE INSERT POSITION
W, X, Y and Z (omit for "Normal), see page A-89

MODIFICATION CODE
A71 - Electroless Nickel Hardware, RoHS
A176 - Contacts hard gold over nickel, RoHS
A206 - Black zinc cobalt hardware, RoHS
F42 - Connector supplied without endbell, grommet and ferrule
F80 - Snap-in crimp contacts
F183 - Snap-in crimp contacts for metric conductors
DN - CA3106 (plug only), endbell for shrink boot adapter
A232 - Black zinc cobalt hardware, RoHS European version
A233 - Green zinc cobalt hardware, European version

Dimensions shown in inches (mm)
Specifications and dimensions subject to change

Performance and Material Specifications

MATERIALS AND FINISHES

Shell	Material Finish	Aluminum Alloy O.D. Chromate coating over cadmium plating
Insulator	Material	Polychloroprene (resilient)
Contacts	Material Finish Termination	Brass or copper alloy Silver plate Tinned solder pot

WIRING

For class E, F, and R connectors, satisfactory moisture sealing will be obtained if AWG and MS wire sizes and insulation outside diameters are governed by this table.

Contact Size	Wire Size (MIL-W-5086)	Insulation OD Limit (inches)
16	16 thru 20	.064 (1.63) min. to .130 (3.30) max.
12	12 thru 14	.114 (2.90) min. to .170 (4.32) max.
8	8 thru 10	.164 (4.17) min. to .255 (6.48) max.
4	4 thru 6	.275 (6.98) min. to .370 (9.40) max.
0	0 thru 2	.415 (10.54) min to .550 (13.97) max.

ELECTRICAL SERVICE DATA

Test current ratings of contacts and allowable voltage drop under test conditions when assembled as in service are shown below. Maximum total current to be carried per connector is the same as the allowable in wire bundles as specified in MIL-W-5088.

Contact Size	Test Current (amps)	Potential Drop (millivolts)
16	13	49
12	23	42
8	46	26
4	80	23
0	150	21

THERMOCOUPLE CONTACTS

SIzes 12 and 16 contacts, machined from matching thermocouple lead wire alloys, can be supplied in ITT Cannon connectors. These thermocouple contacts maintain continuity from thermal-sensor leads through a bulkhead of other closures in temperature measuring applications.
These contacts for matching lead wires are detailed by the standards of the Instrument Society of America (ISA).

ISA Standards	Material
J and Y	Iron and constantan
K	Chromel and alumel
T	Copper and constantan

Since the thermocouple connector applications determines the soldering methods and materials to be used, thermocouple contacts, identified by permanent markings, are normally supplied with untinned solder pots. Thermocouple contacts are supplied only in connectors having resilient insulators.

HIGH POTENTIAL TEST VOLTAGE

MS connectors show no evidence of breakdown when the test voltage given below is applied between the two closest contacts and between the shell and the contacts closest to the shell for a period of one minute.

MS Service Rating	Test Voltage (RMS) 60 cps	Suggested* Operating Voltages DC	AC (rms)	Air Spacing Nom. (inches)	Creepage Distance Nom. (inches)
Inst.	1000	250	200		1/16
A	2000	700	500	1/16	1/8
D	2800	1250	900	1/8	3/16
E	3500	1750	1250	3/16	1/4
B	4500	2450	1750	1/4	5/16
C	7000	4200	3000	5/16	1

*As indicated in previous MS specification and to be used by designer only as a guide.

Contact Arrangements (Face View Pin Insert)

LEGEND

● Not MS Approved. ITT Cannon Proprietary (see ITT Cannon designed alternative insert positions, page A-90

¢ High Volume Layouts - readily available from Cannon Distributors

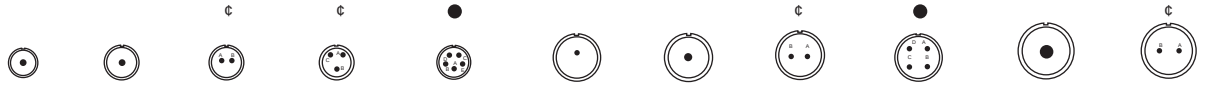

			¢	¢	●			¢	●		¢
Shell Size	8S-1	10S-2	10SL-4	10SL-3	10SLA4	12S-4	12-5	12S-3	12SA10	14-3	14S-9
No. of Contacts	1 #16	1 #16	2 #16	3 #16	5 #20	1 #16	1 #12	2 #16	4 #16	1 #8	2 #16
Service Rating	A	A	A	A	A	D	D	A	Inst.	A	A

		¢	¢	¢	¢					
Shell Size	14S-1	14S-7	14S-2	14S-5	14S-6	16-7	16-12	16-11	16S-4	16-13
No. of Contacts	3 #16	3 #16	4 #16	5 #16	6 #16	2 #16 (A, B) 1 #8 (C)	1 #4	2 #12	2 #16	2 #12 (A-Iron B-Constantan)
Service Rating	A	A	Inst.	Inst.	Inst.	A	A	A	D	A

			¢		¢	¢		
Shell Size	16S-5	16S-6	16-10	16-9	16S-8	16S-1	18-7	18-3
No. of Contacts	3 #16	3 #16	3 #12	2 #16 (B,D) 2 #12 (A,C)	5 #16	7 #16	1 #8	2 #12
Service Rating	A	A	A	A	A	A	B	D

							¢	
Shell Size	18-5	18-22	18-4	18-10	18-13	18-15	18-11	18-12
No. of Contacts	1 #16(A) 2 #12(B,C)	3 #16	4 #16	4 #12	3 #12 (B,C,C) 1 #8(A)	4 #12 (A, C-Iron; B, D-Constantan)	5 #12	6 #16
Service Rating	D	D	D	A	A	A	A	A

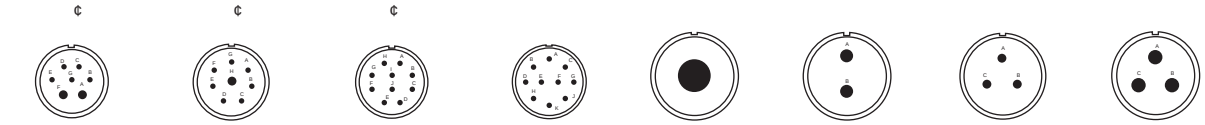

	¢	¢	¢					
Shell Size	18-9	18-8	18-1	18-19	20-2	20-23	20-3	20-19
No. of Contacts	5 #16(B,C,E-G) 2 #12(A,D)	7 #16(A-G) 1 #12(H)	10 #16	10 #16	1 #0	2 #8	3 #12	3 #8
Service Rating	Inst.	A	A(B,C,F,G) Inst. (all others)	A	D	A	D	A

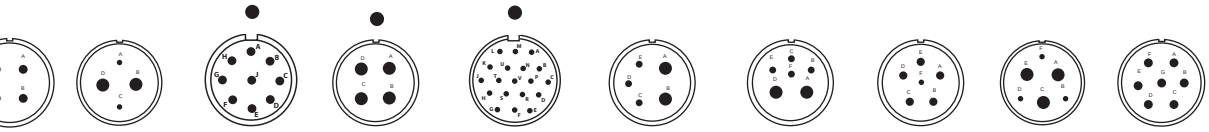

			●	●	●					
Shell Size	20-4	20-24	20A-9	20A37	20A-48	20-14	20-8	20-17	20-22	20-15
No. of Contacts	4 #12	2 #16 (A,C) 2 #8 (B,D)	9 #12	ITT Cannon pos. #8 of 20-4	19 #16	3 #12(C,D,E) 2 #8(A,B)	4 #16(B,C,E,F) 2 #8(A,D)	1 #16(F) 5 #12(A-E)	3 #16(B,D,F) 3 #8(A,C,E)	7 #12
Service Rating	D	A	D (J) A (all others)	D	Inst.	A	Inst.	A	A	A

Dimensions shown in inches (mm)
Specifications and dimensions subject to change

Contact Arrangements (continued)

LEGEND

● Not MS Approved. ITT Cannon Proprietary (see ITT Cannon designed alternative insert positions, page A-90

¢ High Volume Layouts - readily available from Cannon Distributors

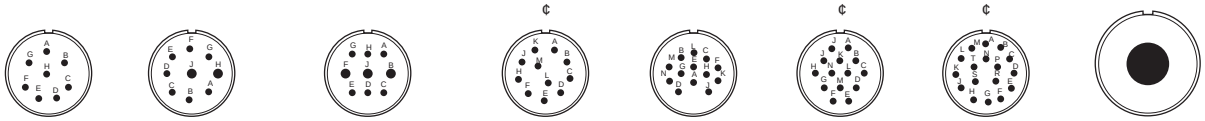

Shell Size	20-7	20-16	20-18	¢ 20-33	20-11	¢ 20-27	¢ 20-29	22-7
No. of Contacts	8 #16	7 #16(A-G) 2 #12(H,I)	6 #16(A,C-E,G,H) 3 #12(B,F,I)	11 #16	13 #16	14 #16	17 #16	1 #0
Service Rating	A(C-F) D(A,B,G,H)	A	A	A	Inst.	A	A	E

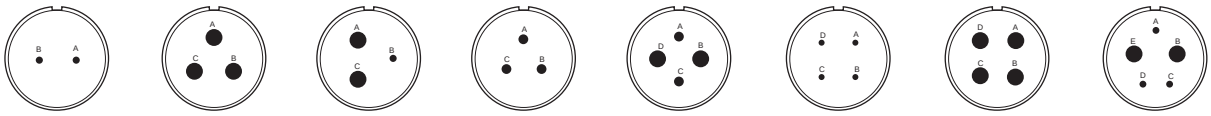

Shell Size	22-11	22-2	22-6	22-9	22-4	22-10	22-22	22-12
No. of Contacts	2 #16	3 #8	1 #16(B) 2 #8(A,C)	3 #12	2 #12(A,C) 2 #8(B,D)	4 #16	4 #8	3 #16(A,C,D) 2 #8(B,E)
Service Rating	B	D	D	E	A	E	A	D

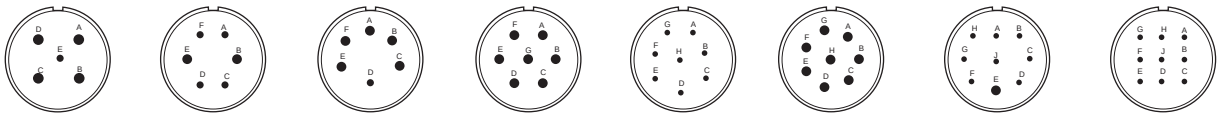

Shell Size	22-13	22-5	22-15	22-28	22-18	22-23	22-17	22-20
No. of Contacts	1 #16(E) 4 #12(A-D)	4 #16(A,C,D,F) 2 #12(B,E)	1 #16(D) 5 #12(A-C,E,F)	7 #12	8 #16	8 #12	8 #16(A-D,F-J) 1 #12(E)	9 #16
Service Rating	A(A-D), D(E)	D	A(A-C,E,F),E(D)	A	A(C-E) D(all others)	D(H) A(all others)	D(A), A(all others)	A

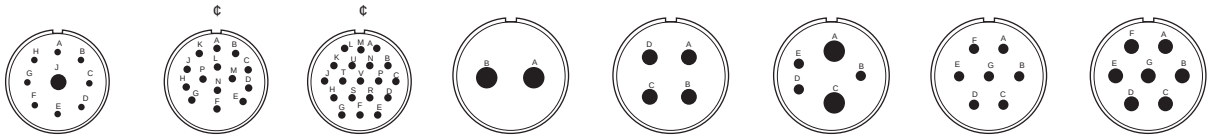

Shell Size	22-27	¢ 22-19	¢ 22-14	24-9	24-22	24-12	24-2	24-10
No. of Contacts	8 #16(A-H) 1 #8(J)	14 #16	19 #16	2 #4	4 #8	3 #12(B,D,E) 2 #4(A,C,)	7 #12	7 #8
Service Rating	D(J), A (all others)	A	A	A	D	A	D	A

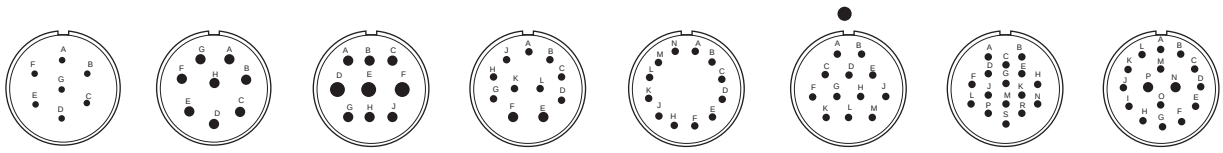

Shell Size	24-27	24-6	24-11	24-20	24-19	24A24	24-5	24-7
No. of Contacts	7 #16	8 #12	6 #12(A-C,G-I) 3 #8(D-F)	9 #16(A-D,G-L) 2 #12(E,F)	12 #16 6 #12(B-G)	12 #12	16 #16	14 #16(A-M,O) 2 #12(P,N)
Service Rating	E	D(A,G,H) A(all others)	A	D	A	A	A	A

Contact Arrangements (continued)

LEGEND

● Not MS Approved. ITT Cannon Proprietary (see ITT Cannon designed alternative insert positions, page A-90

¢ High Volume Layouts - readily available from Cannon Distributors

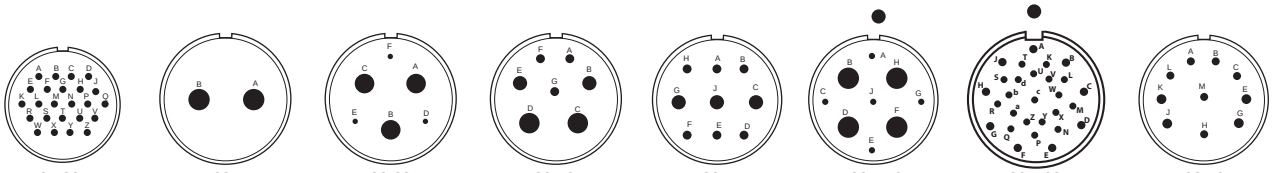

Shell Size	24-28	28-7	28-22	28-10	28-1	28A-16	28A-63	28-19
No. of Contacts	24 #16	2 #4	3 #16(D-F) 3 #4(A-C)	3 #12(A,F,G) 2 #8(B,E) 2 #4(C,D)	6 #12(A,B,D-F,H) 3 #8(C,J,G)	5 #16 (A, D-F, J) 4 #4 (B, C, G, H)	9 #12 19 #16	6 #16(A-C,H,L,M) 4 #12(E,G,J,K)
Service Rating	Inst.	D	D	D(G), A(all others)	D(A,E,J) A(all others)	A (e) Inst. (all others)	A (e) Inst. (all others)	A(C,E,G,J,K,L) B(H,M),D(A,B)

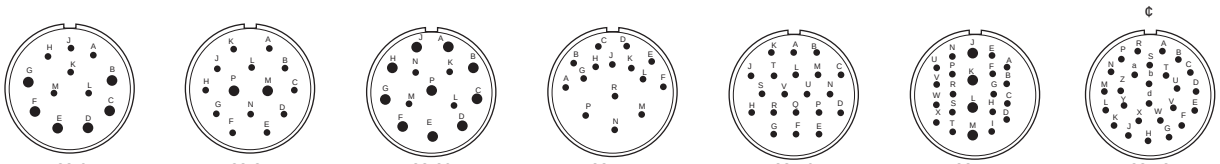

								¢
Shell Size	28-9	28-2	28-20	28-17	28-16	28-11	28-12
No. of Contacts	6 #16(A,H-M) 6 #12(B-G)	12 #16(A,L,N) 2 #12(M,P)	4 #16(K-N) 10 #12(A-J,P)	15 #16	20 #16	18 #16(A-I, N-X) 4 #12(J-M)	26 #16
Service Rating	D	D	A	A(A-L), B(R) D(M-P)	A	A	A

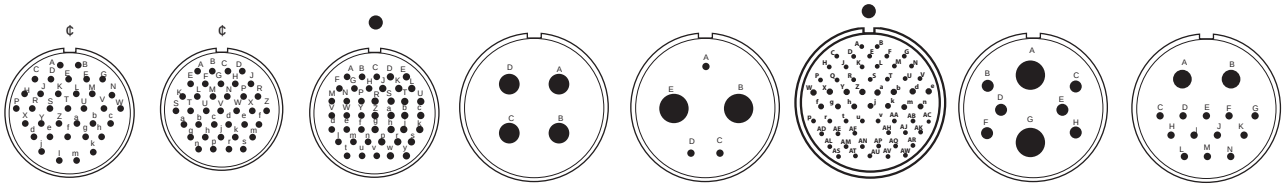

	¢	¢						
Shell Size	28-15	28-21	28A51	32-17	32-1	32A-69	32-15	32-9
No. of Contacts	35 #16	37 #16	43 #16	4 #4	3 #12(A,C,D) 2 #0(B,E)	41 #20 20 #16	2 #0(A,G) 6 #12(B,C,D,E,F,H)	12 #16(C-N) 2 #4(A,B)
Service Rating	A For MIL equip design, use 28-21	A	A	D	E(A),D(all others)	Inst.	D	D

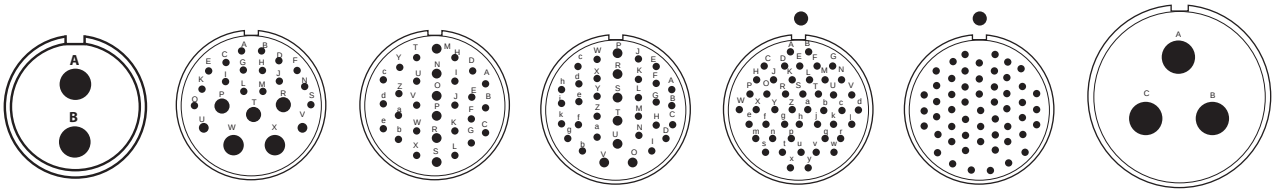

Shell Size	32-5	32-6	32-8	32-7	32A47	32A10	36-4
No. of Contacts	2#0	16 #16(A-O,S) 2 #12(U,V) 3 #8(P,R,T) 2 #4(W,X)	24 #16(A-L,T-Z,a-e) 6 #12(M-S) 2 #8(O,R)	28 #16(A-N,W-Z,a-k) 7 #12(O-V)	47 #16	54 #16	3 #0
Service Rating	D	A	A For new MIL equip. design, use 32-7	Inst. (A,B,h,j) A(all others)	A	A	A(B,C),C(A)

***NOTE: Additional layouts are the same as shown but in unique alternate positioins. Please consult the factory.**

Dimensions shown in inches (mm)
Specifications and dimensions subject to change

Contact Arrangements (continued)

● Not MS Approved. ITT Cannon Proprietary (see ITT Cannon designed alternative insert positions, page A-90

¢ High Volume Layouts - readily available from Cannon Distributors

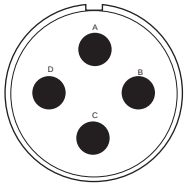

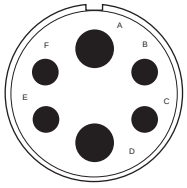

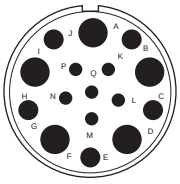

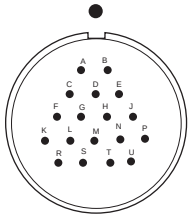

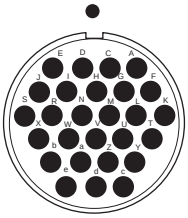

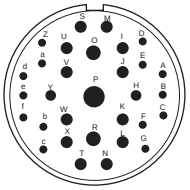

Shell Size No. of Contacts	36-5 4 #0	36-6 4 #4(B,C,E,F) 2 #0(A,D)	36-14 6 #16(K-N,P,Q) 5 #12(B,D,F,H,J) 5 #8(A,C,E,G,I)	36A16 18 #12 (B,C,V,J,K,M,N, R, T-Iron; A,D-F,H,L P,S,U-Constantan)	36A46 27 #12	36-9 14 #16(A-G,Z-f) 14 #12(H-N,S-Y) 2 #8(O,R) 1 #4(P)
Service Rating	A	A	D	A	A	A

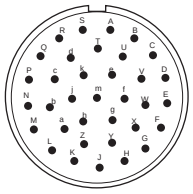

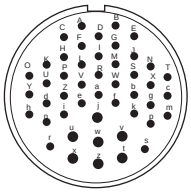

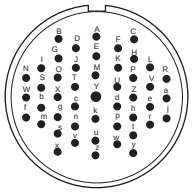

¢

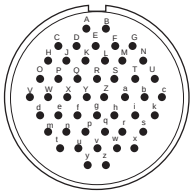

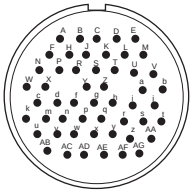

● †

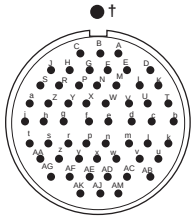

Shell Size No. of Contacts	36-15 35 #16	36-7 40 #16(A-Z,a-s) 7 #12(t-z)	36-8 46 #16(A-X,Z-z 1 #12(Y)	36-10 48 #16	36A34 52 #16	36A66 52 #16(A-c,h-AK) 4 #12(d,e,f,g)
Service Rating	D(m), A (all others)	A	A	A	A	A

● †

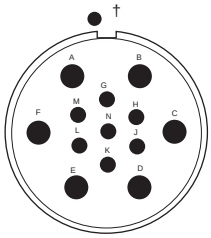

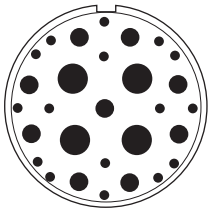

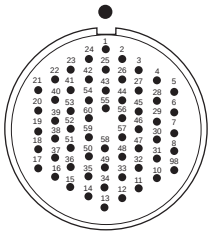

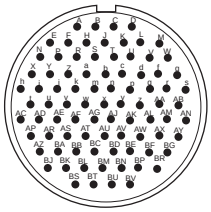

Shell Size No. of Contacts	40A33 7 #8(G-N) 6 #4(A-F)	40-10 16 #16(A,B,E-H,M,N,P Q,V-Y,b,c) 9 #8(C,D,I,L,O,R,U,Z,a) 4 #4(K,J,S,T)	40A27 60 #16	40-56 85 #16
Service Rating	A	A	A	A

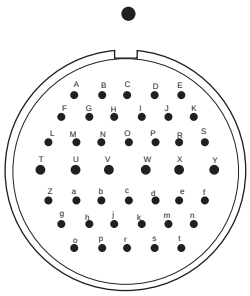

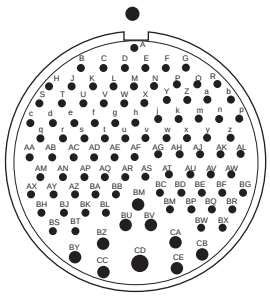

Shell Size No. of Contacts	44-1 36 #16(A-S,Z-t 6 #12(T-Y)	48-5 90 #16(A-BL,BN-BT,BW,BX) 1 #8(CD) 9 #12(BM,BU,BV,BY-CC,CE)
Service Rating	D	A

MS Alternate Insert Positions

All views are looking into front of pin insert of rear of socket insert.

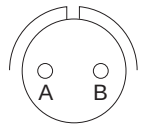

Normal Position

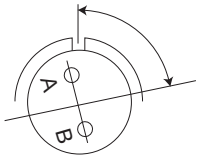

Position W

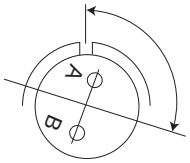

Position X

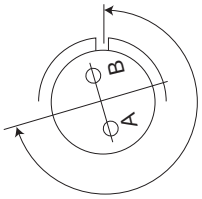

Position Y

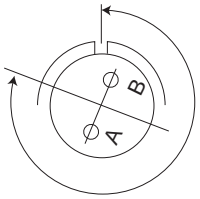

Position Z

Shell Size	Contact Arrangement	Wire Size	Service Rating	Alternate Positions Degrees W	X	Y	Z
8S	8S-1	1 #16	A	-	-	-	-
10S	10S-2	1 #16	A	-	-	-	-
	10SL-4	2 #16	A	-	-	-	-
	10SL-3	3 #16	A	-	-	-	-
12	12-5	1 #12	D	-	-	-	-
12S	12S-4	1 #16	D	-	-	-	-
	12S-3	2 #16	A	70	145	215	290
14	14-3	1 #8	A	-	-	-	-
14S	14S-1	3 #16	A	-	-	-	-
	14S-2	4 #16	Inst.	-	120	240	-
	14S-5	5 #16	Inst.	-	110	-	-
	14S-6	6 #16	Inst.	-	-	-	-
	14S-7	3 #16	A	90	180	270	-
	14S-9	2 #16	A	70	145	215	290
16	16-7	2#16	A	80	110	250	280
		1#8					
	16-9	2 #16	A	35	110	250	325
		2 #12					
	16-10	3 #12	A	90	180	270	-
	16-12	1 #4	A	-	-	-	-
	16-11	2 #12	A	35	110	250	325
	16-13	2 #12	A	35	110	250	325
16S	16S-1	7 #16	A	80	-	-	280
	16S-4	2 #16	D	35	110	250	325
	16S-5	3 #16	A	70	145	215	290
	16S-6	3 #16	A	90	180	270	-
	16S-8	5 #16	A	-	170	265	-
18	18-1	10 #16	A(B,C,F,G)	70	145	215	290
			Inst.(all others)				
	18-3	2 #12	D	35	110	250	325
	18-4	4 #16	D	35	110	250	325
	18-5	1 #16	D	80	110	250	280
		2 #12					
	18-7	1 #8	B	-	-	-	-
	18-8	7 #16	A	70	-	-	290
		1 #12					
	18-9	5 #16	Inst.	80	110	250	280
		2 #12					
	18-10	4 #12	A	-	120	240	-
	18-11	5 #12	A	-	170	265	-
	18-12	6 #16	A	80	-	-	280
	18-13	3 #12	A	80	110	250	280
		1 #8					
	18-15	4 #12	A	-	120	240	-
	18-19	10 #16	A	-	120	240	-
	18-22	3 #16	D	70	145	215	290
20	20-2	1 #0	D	-	-	-	-
	20-3	3 #12	D	70	145	215	290
	20-4	4 #12	D	45	110	250	-
	20-7	8 #16	A(C-F)	80	110	250	280
			D(A,B,G,H)				
	20-8	4 #16	Inst.	80	110	250	280
		2 #8					
	20-14	3 #12	A	80	110	250	280
		2 #8					
	20-15	7 #12	A	80	-	-	280
	20-16	7 #16	A	80	110	250	280
		2 #12					
	20-17	1 #16	A	90	180	270	-
		5 #12					
	20-18	6 #16	A	35	110	250	325
		3 #12					
	20-19	3 #8	A	90	180	270	-
20	20-22	3 #16	A	80	110	250	280
		3 #8					
	20-23	2 #8	A	35	110	250	325
	20-24	2 #16	A	35	110	250	325
		2 #8					
	20-27	14 #16	A	35	110	250	325
	20-29	17 #16	A	80	-	-	280
	20-33	11 #16	A	-	-	-	-
22	22-2	3 #8	D	70	145	215	290
	22-4	2 #12	A	35	110	250	325
		2 #8					
	22-5	4 #16	D	35	110	250	325
		2 #12					
	22-6	1 #16	D	80	110	250	280
		2 #8					
	22-7	1 #0	E	-	-	-	-
	22-9	3 #12	E	70	145	215	290
	22-10	4 #16	E	35	110	250	325
	22-11	2 #16	B	35	110	250	325
	22-12	3 #16	D	80	110	250	280
		2 #8					
	22-13	1 #16	A(A-D)	35	110	250	325
		4 #12	D(E)				
	22-14	19 #16	A	80	-	-	280
	22-15	1 #16	A(A-C,E,F)	80	110	250	280
		5 #12	E(D)				
	22-17	8 #16	D(A)	80	110	250	280
		1 #12	A(all others)				
	22-18	8 #16	A(C-E)	80	110	250	280
			D(all others)				
	22-19	14 #16	A	80	110	250	280
	22-20	9 #16	A	35	110	250	325
	22-22	4 #8	A	-	110	250	-
	22-23	8 #12	D(H)	35	-	250	-
			A(all others)				
	22-27	8 #16	D(J)	80	-	250	280
		1 #8	A(all others)				
	22-28	7 #12	A	80	-	-	280
24	24-2	7 #12	D	80	-	-	280
	24-5	16 #16	A	80	110	250	280
	24-6	8 #12	D(A,G,H)	80	110	250	280
			A(all others)				
	24-7	14 #16	A	80	110	250	280
		2 #12					
	24-9	2 #4	A	35	110	250	325
	24-10	7 #8	A	80	-	-	280
	24-11	6 #12	A	35	110	250	325
		3 #8					
	24-12	3 #12	A	80	110	250	280
		2 #4					
	24-20	9 #16	D	80	110	250	280
		2 #12					
	24-22	4 #8	D	45	110	250	-
	24-27	7 #16	E	80	-	-	280
	24-28	24 #16	Inst.	80	110	250	280
28	28-1	6 #12	D(A,E,J)	80	110	250	280
		3 #8	A(all others)				
	28-2	12 #16	D	35	110	250	325
		2 #12					
	28-7	2 #4	D	35	110	250	325
	28-9	6 #16		80	110	250	280
		6 #12	D				
28	28-10	3 #12	D(G)	80	110	250	280
		2 #8	A(all others)				
		2 #4					
	28-11	18 #16	A	80	110	250	280
		4 #12					
	28-12	26 #16	A	90	180	270	-
	28-15	35 #16	A	80	110	250	280
	28-16	20 #16	A	80	110	250	280
	28-17	15 #16	A(A-L),B(R)	80	110	250	280
			D(M-P)				
	28-19	6 #16	A(C,E,G,J,K,L)	80	110	250	280
		4 #12	B(H,M), D(A,B)				
	28-20	4 #16	A	80	110	250	280
		10 #16					
	28-21	37 #16	A	80	110	250	280
	28-22	3 #16	D	70	145	215	290
		3 #4					
32	32-1	3 #12	E(A)	80	110	250	280
		2 #0	D(all others)				
	32-5	2 #0	D	80	110	250	325
	32-6	16 #16	A	80	110	250	280
		2 #12					
		3 #8					
		2 #4					
	32-7	28 #16	Inst.(A,B,h,j)	80	125	235	280
		7 #12	A(all others)				
	32-8	24 #16	A	80	125	235	280
		6 #12					
	32-9	12 #16	D	80	110	250	280
		2 #4					
	32-15	2 #0	D	35	110	250	280
		6 #12					
	32-17	4 #4	D	45	110	250	-
36	36-4	3 #0	A(B,C)	70	145	215	290
			D(A)				
	36-5	4 #0	A	-	120	240	-
	36-6	4 #4	A	35	110	250	325
		2 #0					
	36-7	40 #16	A	80	110	250	280
		7-12					
	36-8	46 #16	A	80	110	250	280
		1 #12					
	36-9	14 #16	A	80	125	235	280
		14 #12					
		2 #8					
		1 #4					
	36-10	48 #16	A	80	125	235	280
	36-14	6 #16	D	90	180	270	-
		5 #12					
		5 #8					
	36-15	35 #16	D(m)	60	125	245	305
			A(all others)				
40	40-10	16 #16	A	65	125	225	310
		9 #8					
		4 #4					
	40-56	85 #16	A	72	144	216	288
44	44-1	36 #16	D	65	125	225	310
		6 #12					
48	48-5	90 #16	A	65	125	225	310
		1 #8					
		9 #12					

Dimensions shown in inches (mm)
Specifications and dimensions subject to change

ITT Cannon Designated Alternate Insert Positions

Not MS approved.

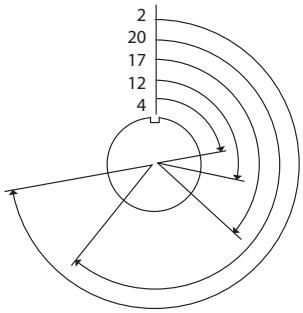

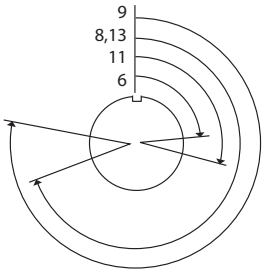

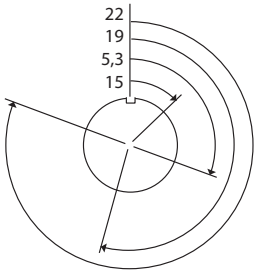

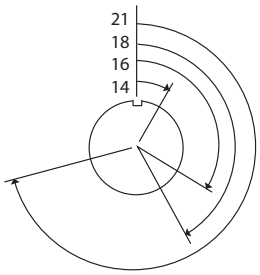

NOTE: Front view of pin insulator rotates as shown.

Shell Size	Contact Arrangement	Wire Size	Service Rating	Available Position	
20	20A-9	9#12	D (J) A (all others)		
20	20A-48	19#16	Inst.	4	9
28	28A-16	5#16 4#4	A (e) Inst (all others)	2	12
28	28A-63	9#12 19#16	A (e) Inst (all others)		
32	32A-69	41#20 20#16	Inst	3	8
		20	220		
		21	255		
		22	290		
		23	165		
		24	330		
		25	235		
		26	125		

Wall Mounting Receptacle

MS3100E / MS3100F
Integral Cable Clamp

CA3100E / CA3100E

MS3100F wall mounting receptacles are used to carry wires thru walls or bulkheads, or to provide a means of disconnection at a bulkhead. MS3100F receptacles mate with 3106 and 3108 plugs.

MS3100E is identical to MS3100F and is available upon request. For new equipment, customer should specify MS3100F.

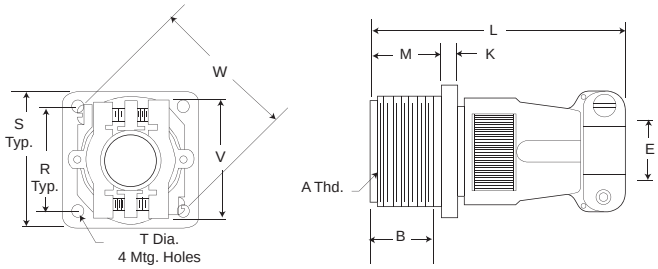

MS3100R

CA3100R

The MS3100R receptacle is identical in purpose to the MS3100F. The MS3100R features a shorter light weight endbell and mates with 3106 and 3108 plugs.

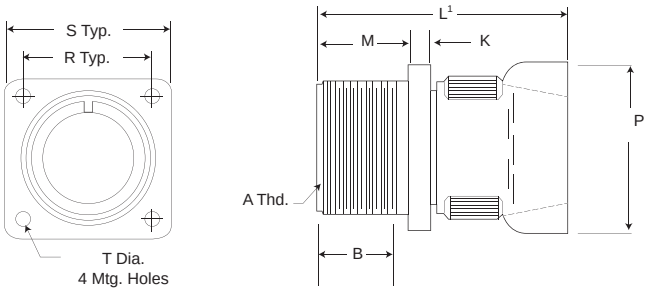

Shell Size	B Min.	E Max.	E Min.	K Max.	L Max.	L¹ Max.	E +.031 -.000	P Max.	R ± .005	S ± .031	T + .010 - .005	V Max.	W Max.
8S	.375 (9.53)	.235 (5.97)	.102 (2.59)	.125 (3.18)	2.250 (57.15)	1.838 (46.69)	.562 (14.27)	.890 (22.61)	.594 (15.09)	.875 (22.23)	.120 (3.05)	.840 (21.34)	1.046 (26.57)
10S	.375 (9.53)	.235 (5.97)	.102 (2.59)	.125 (3.18)	2.250 (57.15)	1.838 (46.69)	.562 (14.27)	.890 (22.61)	.719 (18.26)	1.000 (25.40)	.120 (3.05)	.840 (21.34)	1.046 (26.57)
10SL	.375 (9.53)	.297 (7.54)	.140 (3.56)	.125 (3.18)	2.250 (57.15)	1.838 (46.69)	.562 (14.27)	.970 (24.64)	.719 (18.26)	1.000 (25.40)	.120 (3.05)	.900 (22.86)	1.125 (28.58)
12S	.375 (9.53)	.297 (7.54)	.140 (3.56)	.140 (3.56)	2.250 (57.15)	1.838 (46.69)	.562 (14.27)	.970 (24.64)	.812 (20.62)	1.094 (27.79)	.120 (3.05)	.900 (22.86)	1.125 (28.58)
14S	.375 (9.53)	.422 (10.72)	.195 (4.95)	.140 (3.56)	2.250 (57.15)	1.838 (46.69)	.562 (14.27)	1.150 (29.21)	.906 (23.01)	1.188 (30.18)	.120 (3.05)	1.100 (27.94)	1.343 (34.11)
16S	.375 (9.53)	.547 (13.89)	.255 (6.48)	.140 (3.56)	2.250 (57.15)	1.838 (46.69)	.562 (14.27)	1.250 (31.75)	.969 (24.61)	1.281 (32.54)	.120 (3.05)	1.200 (30.48)	1.484 (37.69)
12	.625 (15.88)	.297 (7.54)	.140 (3.56)	.146 (3.71)	2.625 (66.68)	2.181 (55.40)	.750 (19.05)	.970 (24.64)	.812 (20.62)	1.094 (27.79)	.120 (3.05)	.900 (22.86)	1.125 (28.58)
14	.625 (15.88)	.422 (10.72)	.195 (4.95)	.146 (3.71)	2.625 (66.68)	2.181 (55.40)	.750 (19.05)	1.150 (29.21)	.906 (23.01)	1.188 (30.18)	.120 (3.05)	1.100 (27.94)	1.343 (34.11)
16	.625 (15.88)	.547 (13.89)	.255 (6.48)	.146 (3.71)	2.625 (66.68)	2.181 (55.40)	.750 (19.05)	1.250 (31.75)	.969 (24.61)	1.281 (32.54)	.120 (3.05)	1.200 (30.48)	1.484 (37.69)
18	.625 (15.88)	.610 (15.49)	.285 (7.24)	.180 (4.57)	2.688 (68.28)	2.181 (55.40)	.750 (19.05)	1.450 (36.83)	1.062 (26.97)	1.375 (34.93)	.120 (3.05)	1.300 (33.02)	1.609 (40.87)
20	.625 (15.88)	.735 (18.67)	.350 (8.89)	.180 (4.57)	2.750 (69.85)	2.181 (55.40)	.750 (19.05)	1.570 (39.88)	1.156 (29.36)	1.500 (38.10)	.120 (3.05)	1.500 (38.10)	1.890 (48.01)
22	.625 (15.88)	.740 (18.80)	.350 (8.89)	.180 (4.57)	2.750 (69.85)	2.181 (55.40)	.750 (19.05)	1.570 (39.88)	1.250 (31.75)	1.625 (41.28)	.120 (3.05)	1.500 (38.10)	1.890 (48.01)
24	.625 (15.88)	.922 (23.42)	.468 (11.89)	.203 (5.16)	2.969 (75.44)	2.181 (55.40)	.812 (20.62)	1.880 (47.75)	1.375 (34.93)	1.750 (44.45)	.147 (3.73)	1.740 (44.20)	2.170 (55.12)
28	.625 (15.88)	.922 (23.42)	.468 (11.89)	.203 (5.16)	3.031 (76.99)	2.181 (55.40)	.812 (20.62)	1.880 (47.75)	1.562 (39.67)	2.000 (50.80)	.147 (3.73)	1.740 (44.20)	2.170 (55.12)
32	.625 (15.88)	1.235 (31.37)	.664 (15.87)	.203 (5.16)	3.031 (76.99)	2.322 (58.98)	.875 (22.23)	2.205 (56.01)	1.750 (44.45)	2.250 (57.15)	.173 (4.39)	2.075 (52.71)	2.656 (67.46)
36	.625 (15.88)	1.360 (34.54)	.694 (17.63)	.203 (5.16)	3.281 (84.34)	2.322 (58.98)	.875 (22.23)	2.400 (60.96)	1.938 (49.23)	2.500 (63.50)	.173 (4.39)	2.300 (58.42)	2.922 (74.22)
40	.625 (15.88)	1.628 (41.35)	.911 (23.14)	.203 (5.16)	3.560 (89.66)†	2.427 (61.65)†	.875 (22.23)	2.840 (72.14)	2.188 (55.58)	2.750 (69.85)	.173 (4.39)	2.688 (68.28)	-

† Not to MS specification

Shell Size	A Thread
8S	1/2-28UNEF-2A
10S	5/8-24UNEF-2A
10SL	5/8-24UNEF-2A
12S	3/4-20UNEF-2A
14S	7/8-20UNEF-2A
16S	1-20UNEF-2A
12	3/4-20UNEF-2A
14	7/8-20UNEF-2A

Shell Size	A Thread
16	1-20UNEF-2A
18	1-1/8-18UNEF-2A
20	1-1/4-18UNEF-2A
22	1-3/8-18UNEF-2A
24	1-1/2-18UNEF-2A
28	1-3/4-18UNS-2A
32	2-18UNS-2A
36	2-1/4-16UN-2A
40	2-1/2-16UN-2A

Performance Specifications - Page A-84

Contact, Ceiling Plugs, Assembly Tools - Page A-105

Contact Arrangements - Page A-85 – A-89

Dimensions shown in inches (mm)
Specifications and dimensions subject to change

Cable Connecting Plug (Receptacle with no mounting flange)

MS3101E / MS3101F
Integral Cable Clamp

CA3101E / CA3101E

MS3101E cable connecting plugs are used for cable extension requirements, where mounting provisions are unnecessary.

MS3101E receptacle mate with 3106, and 3108 plugs.

Note: MIL-C-5015 has changed the nomenclature of the 3101 from Receptacle to Plug.

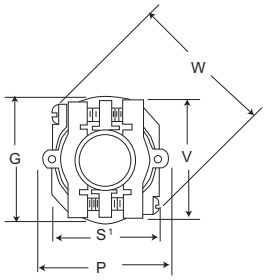

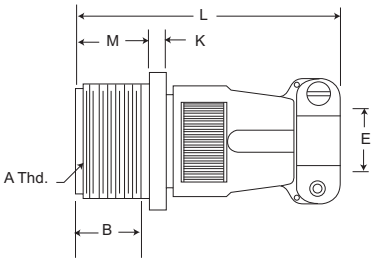

MS3101R

CA3101R

MS3101R cable connecting plug is identical in purpose to the MS3101E. The MS3101R features a shorter light weight endbell and mates with 3106, and 3108 plugs.

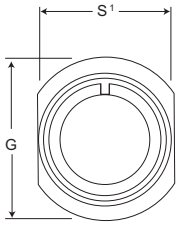

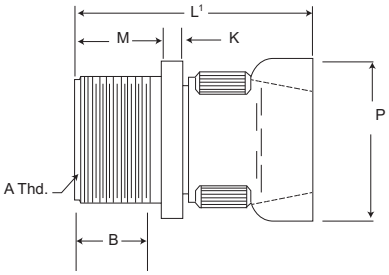

Shell Size	B Min.	E Max.	E Min.	G Max.	K Max.	L Max.	L¹ Max.	M +.031 (0.79) -.000 (0.00)	P Max.	S¹ Max.	V Max.	W Max.
8S	.375 (9.53)	.235 (5.97)	.102 (2.59)	.844 (21.44)	.125 (3.18)	2.250 (57.15)	1.838 (46.69)	.562 (14.27)	.890 (22.61)	.515 (13.08)	.840 (21.34)	1.046 (26.57)
10S	.375 (9.53)	.235 (5.97)	.102 (2.59)	.969 (24.61)	.125 (3.18)	2.250 (57.15)	1.838 (46.69)	.562 (14.27)	.890 (22.61)	.640 (16.26)	.840 (21.34)	1.046 (26.57)
10SL	.375 (9.53)	.297 (7.54)	.140 (3.56)	1.062 (26.97)	.125 (3.18)	2.250 (57.15)	1.838 (46.69)	.562 (14.27)	.970 (24.64)	.640 (16.26)	.900 (22.86)	1.125 (28.58)
12S	.375 (9.53)	.297 (7.54)	.140 (3.56)	1.062 (26.97)	.140 (3.56)	2.250 (57.15)	1.838 (46.69)	.562 (14.27)	.970 (24.64)	.765 (19.43)	.900 (22.86)	1.125 (28.58)
14S	.375 (9.53)	.422 (10.72)	.195 (4.95)	1.156 (29.36)	.140 (3.56)	2.250 (57.15)	1.838 (46.69)	.562 (14.27)	1.150 (29.21)	.890 (22.61)	1.100 (27.94)	1.343 (34.11)
16S	.375 (9.53)	.547 (13.89)	.255 (6.48)	1.281 (32.54)	.140 (3.56)	2.250 (57.15)	1.838 (46.69)	.562 (14.27)	1.250 (31.75)	1.015 (25.78)	1.200 (30.48)	1.484 (37.69)
12	.625 (15.88)	.297 (7.54)	.140 (3.56)	1.062 (26.97)	.146 (3.71)	2.625 (66.68)	2.181 (55.40)	.750 (19.05)	.970 (24.64)	.765 (19.43)	.900 (22.86)	1.125 (28.58)
14	.625 (15.88)	.422 (10.72)	.195 (4.95)	1.156 (29.36)	.146 (3.71)	2.625 (66.68)	2.181 (55.40)	.750 (19.05)	1.150 (29.21)	.890 (22.61)	1.100 (27.94)	1.343 (34.11)
16	.625 (15.88)	.547 (13.89)	.255 (6.48)	1.281 (32.54)	.146 (3.71)	2.625 (66.68)	2.181 (55.40)	.750 (19.05)	1.250 (31.75)	1.015 (25.78)	1.200 (30.48)	1.484 (37.69)
18	.625 (15.88)	.610 (15.49)	.285 (7.24)	1.344 (34.14)	.180 (4.57)	2.688 (68.28)	2.181 (55.40)	.750 (19.05)	1.450 (36.83)	1.140 (28.96)	1.300 (33.02)	1.609 (40.87)
20	.625 (15.88)	.735 (18.67)	.350 (8.89)	1.500 (38.10)	.180 (4.57)	2.750 (69.85)	2.181 (55.40)	.750 (19.05)	1.570 (39.88)	1.265 (32.13)	1.500 (38.10)	1.890 (48.01)
22	.625 (15.88)	.740 (18.80)	.350 (8.89)	1.625 (41.28)	.180 (4.57)	2.750 (69.85)	2.181 (55.40)	.750 (19.05)	1.570 (39.88)	1.390 (35.31)	1.500 (38.10)	1.890 (48.01)
24	.625 (15.88)	.922 (23.42)	.468 (11.89)	1.750 (44.45)	.203 (5.16)	2.969 (75.44)	2.181 (55.40)	.812 (20.62)	1.880 (47.75)	1.515 (38.48)	1.740 (44.20)	2.170 (55.12)
28	.625 (15.88)	.922 (23.42)	.468 (11.89)	2.000 (50.80)	.203 (5.16)	3.031 (76.99)	2.181 (55.40)	.812 (20.62)	1.880 (47.75)	1.765 (44.83)	1.740 (44.20)	2.170 (55.12)
32	.625 (15.88)	1.235 (31.37)	.664 (15.87)	2.250 (57.15)	.203 (5.16)	3.031 (76.99)	2.322 (58.98)	.875 (22.23)	2.205 (56.01)	2.015 (51.18)	2.075 (52.71)	2.656 (67.46)
36	.625 (15.88)	1.360 (34.54)	.694 (17.63)	2.500 (63.50)	.203 (5.16)	3.281 (84.34)	2.322 (58.98)	.875 (22.23)	2.400 (60.96)	2.270 (57.66)	2.300 (58.42)	2.922 (74.22)
40	.625 (15.88)	1.628 (41.35)	.911 (23.14)	2.750 (69.85)	.203 (5.16)	3.560 (89.66)†	2.427 (61.65)†	.875 (22.23)	2.840 (72.14)	2.427 (61.65)	2.688 (68.28)	-

† Not to MS specification

Shell Size	A Thread
8S	1/2-28UNEF-2A
10S	5/8-24UNEF-2A
10SL	5/8-24UNEF-2A
12S	3/4-20UNEF-2A
14S	7/8-20UNEF-2A
16S	1-20UNEF-2A
12	3/4-20UNEF-2A
14	7/8-20UNEF-2A

Shell Size	A Thread
16	1-20UNEF-2A
18	1-1/8-18UNEF-2A
20	1-1/4-18UNEF-2A
22	1-3/8-18UNEF-2A
24	1-1/2-18UNEF-2A
28	1-3/4-18UNS-2A
32	2-18UNS-2A
36	2-1/4-16UN-2A
40	2-1/2-16UN-2A

Performance Specifications - Page A-84

Contact, Ceiling Plugs, Assembly Tools - Page A-105

Contact Arrangements - Page A-85 – A-89

Box Mounting Receptacle

MS3102E / MS3102R **CA3102E / CA3102R**

MS3102E and MS3102R box mounting receptacles are used in junction boxes or as an integral part of equipment. These connectors are identical in construction and will mate with 3106 and 3108 plugs. For new equipment, customers should specify MS3102R.

X DIMENSION					
Max. Solder Pot Ext. - Pin or Socket					
Contact Size					
Shell Size	16	12	8	4	0
8S, 10S, 10SL	.534	-	-	-	-
12S, 14S, 16S	.518	-	-	-	-
12	.705	.705	-	-	-
14	.705	.705	.767	-	-
16	.705	.705	.767	.767	-
18	.674	.674	.736	.736	-
20, 22	.674	.674	.736	.736	.971
24, 28	.612	.612	.674	.674	.909
32, 36	.549	.549	.611	.611	.846

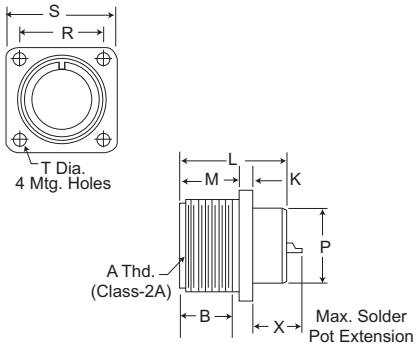

Straight Plug

MS3106E / MS3106F **CA3106E / CA3106E**

MS3106F straight plugs mate with 3100, 3102 and 3102 receptacles.

MS3106E is available upon request. For new equipment, customer should specify MS3106F. MS3106E is identical to MS3106F except to O-ring under the coupling nut.

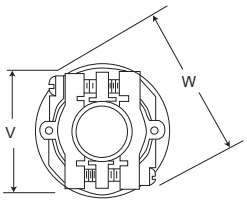

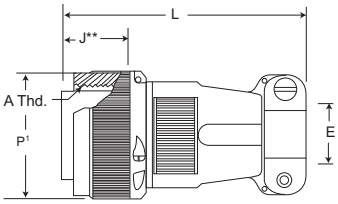

MS3106R **CA3106R**

MS3106R straight plug is identical in purpose to the MS3106F. The MS3106R has the shorter endbell. This plug will mate with 3100, 3101, and 3102 receptacles.

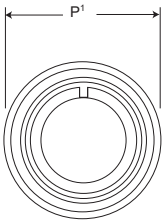

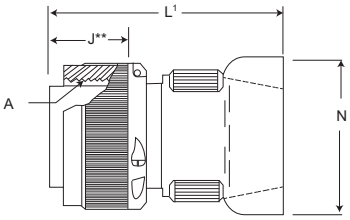

Shell Size	E Max.	E Min.	J** Max.	L Max.	L¹ Max.	N Max.	P¹ Max.	V Max.	W Max.
8S	.235 (5.97)	.102 (2.59)	.536 (13.61)	2.250 (57.15)	1.838 (46.69)	.890 (22.61)	.844 (21.44)	.840 (21.34)	1.046 (26.57)
10S	.235 (5.97)	.102 (2.59)	.536 (13.61)	2.250 (57.15)	1.838 (46.69)	.890 (22.61)	.969 (24.61)	.840 (21.34)	1.046 (26.57)
10SL	.297 (7.54)	.140 (3.56)	.536 (13.61)	2.250 (57.15)	1.838 (46.69)	.970 (24.64)	.969 (24.61)	.900 (22.86)	1.125 (28.58)
12S	.297 (7.54)	.140 (3.56)	.536 (13.61)	2.250 (57.15)	1.838 (46.69)	.970 (24.64)	1.062 (26.97)	.900 (22.86)	1.125 (28.58)
14S	.422 (10.72)	.195 (4.95)	.536 (13.61)	2.250 (57.15)	1.838 (46.69)	1.150 (29.21)	1.156 (29.36)	1.100 (27.94)	1.343 (34.11)
16S	.547 (13.89)	.255 (6.48)	.536 (13.61)	2.250 (57.15)	1.838 (46.69)	1.250 (31.75)	1.250 (31.75)	1.200 (30.48)	1.484 (37.69)
12	.297 (7.54)	.140 (3.56)	.724 (18.39)	2.625 (66.68)	2.181 (55.40)	.970 (24.64)	1.062 (26.97)	.900 (22.86)	1.125 (28.58)
14	.422 (10.72)	.195 (4.95)	.724 (18.39)	2.625 (66.68)	2.181 (55.40)	1.150 (29.21)	1.156 (29.36)	1.100 (27.94)	1.343 (34.11)
16	.547 (13.89)	.255 (6.48)	.724 (18.39)	2.625 (66.68)	2.181 (55.40)	1.250 (31.75)	1.250 (31.75)	1.200 (30.48)	1.484 (37.69)
18	.610 (15.49)	.285 (7.24)	.724 (18.39)	2.688 (68.28)	2.181 (55.40)	1.450 (36.83)	1.344 (34.14)	1.300 (33.02)	1.609 (40.87)
20	.735 (18.67)	.350 (8.89)	.724 (18.39)	2.750 (69.85)	2.181 (55.40)	1.570 (39.88)	1.469 (37.31)	1.500 (38.10)	1.890 (48.01)
22	.740 (18.80)	.350 (8.89)	.724 (18.39)	2.750 (69.85)	2.181 (55.40)	1.570 (39.88)	1.594 (40.49)	1.500 (38.10)	1.890 (48.01)
24	.922 (23.42)	.468 (11.89)	.724 (18.39)	2.969 (75.44)	2.181 (55.40)	1.880 (47.75)	1.719 (43.66)	1.740 (44.20)	2.170 (55.12)
28	.922 (23.42)	.468 (11.89)	.724 (18.39)	3.031 (76.99)	2.181 (55.40)	1.880 (47.75)	1.969 (50.01)	1.740 (44.20)	2.170 (55.12)
32	1.235 (31.37)	.664 (15.87)	.724 (18.39)	3.031 (76.99)	2.322 (58.98)	2.205 (56.01)	2.219 (56.36)	2.075 (52.71)	2.656 (67.46)
36	1.360 (34.54)	.694 (17.63)	.724 (18.39)	3.281 (84.34)	2.322 (58.98)	2.400 (60.96)	2.469 (62.71)	2.300 (58.42)	2.922 (74.22)
40	1.628 (41.35)	.911 (23.14)	.724 (18.39)	3.560 (89.66)†	2.427 (61.65)†	2.840 (72.14)	2.723 (69.16)†	2.688 (68.28)	-

† Not to MS specification

Dimensions shown in inches (mm)
Specifications and dimensions subject to change

Straight Plug (continued)

Performance Specifications - Page A-84

Contact, Ceiling Plugs, Assembly Tools - Page A-105

Contact Arrangements - Page A-85 – A-89

Shell Size	A Thread
8S	1/2-28UNEF-2A
10S	5/8-24UNEF-2A
10SL	5/8-24UNEF-2A
12S	3/4-20UNEF-2A
14S	7/8-20UNEF-2A
16S	1-20UNEF-2A
12	3/4-20UNEF-2A
14	7/8-20UNEF-2A

Shell Size	A Thread
16	1-20UNEF-2A
18	1-1/8-18UNEF-2A
20	1-1/4-18UNEF-2A
22	1-3/8-18UNEF-2A
24	1-1/2-18UNEF-2A
28	1-3/4-18UNS-2A
32	2-18UNS-2A
36	2-1/4-16UN-2A
40	2-1/2-16UN-2A

90° Angle Plug

MS3108E / MS3108R **CA3108E / CA3108R**

MS3108R 90° angle plugs with O-ring seal (less cable clamp) and the MS3108E 90° angle plugs (less O-ring seal with cable clamp) are used where there is limited space and where wires must be brought at abrupt angles. These plugs will mate with 3100, 3101 and 3102 receptacles.

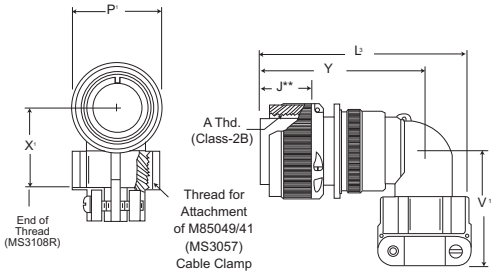

Shell Size	B Min.	J** Max.	K Max.	L Max.	L³ Max.	M +.031 (0.79) -.000 (0.00)	P Max.	P¹ Max.	R ± .005	S ± .031	T + .010 - .005	V¹ Max.	X¹ Max.	Y Max.
8S	.375 (9.53)	.536 (13.61)	.125 (3.18)	1.040 (26.42)	2.156 (54.76)	.562 (14.27)	.426 (10.86)	.844 (21.44)	.594 (15.09)	.875 (22.23)	.120 (3.05)	1.281 (30.94)	.811 (20.60)	1.640 (41.66)
10S	.375 (9.53)	.536 (13.61)	.125 (3.18)	1.040 (26.42)	2.156 (54.76)	.562 (14.27)	.520 (13.21)	.969 (24.61)	.719 (18.26)	1.000 (25.40)	.120 (3.05)	1.250 (31.75)	.842 (21.39)	1.640 (41.66)
10SL	.375 (9.53)	.536 (13.61)	.125 (3.18)	1.040 (26.42)	2.188 (55.58)	.562 (14.27)	.614 (15.60)	.969 (24.61)	.719 (18.26)	1.000 (25.40)	.120 (3.05)	1.281 (32.54)	.873 (22.17)	1.703 (43.26)
12S	.375 (9.53)	.536 (13.61)	.140 (3.56)	1.040 (26.42)	2.188 (55.58)	.562 (14.27)	.614 (15.60)	1.062 (26.97)	.812 (20.62)	1.094 (27.79)	.120 (3.05)	1.281 (32.54)	.873 (22.17)	1.703 (43.26)
14S	.375 (9.53)	.536 (13.61)	.140 (3.56)	1.040 (26.42)	2.312 (58.72)	.562 (14.27)	.739 (18.77)	1.156 (29.36)	.906 (23.01)	1.188 (30.18)	.120 (3.05)	1.406 (35.71)	.936 (23.77)	1.765 (44.83)
16S	.375 (9.53)	.536 (13.61)	.140 (3.56)	1.040 (26.42)	2.406 (61.11)	.562 (14.27)	.664 (21.95)	1.250 (31.75)	.969 (24.61)	1.281 (32.54)	.120 (3.05)	1.531 (38.89)	.998 (25.35)	1.796 (45.62)
12	.625 (15.88)	.724 (18.39)	.146 (3.71)	1.400 (35.56)	2.531 (64.29)	.750 (19.05)	.614 (15.60)	1.062 (26.97)	.812 (20.62)	1.094 (27.79)	.120 (3.05)	1.281 (32.54)	.873 (22.17)	2.062 (52.37)
14	.625 (15.88)	.724 (18.39)	.146 (3.71)	1.400 (35.56)	2.688 (68.28)	.750 (19.05)	.739 (18.77)	1.156 (29.36)	.906 (23.01)	1.188 (30.18)	.120 (3.05)	1.406 (35.71)	.936 (23.77)	2.125 (53.98)
16	.625 (15.88)	.724 (18.39)	.146 (3.71)	1.400 (35.56)	2.781 (70.64)	.750 (19.05)	.864 (21.95)	1.250 (31.75)	.969 (24.61)	1.281 (32.54)	.120 (3.05)	1.531 (38.89)	.998 (25.35)	2.156 (54.76)
18	.625 (15.88)	.724 (18.39)	.180 (4.57)	1.400 (35.56)	2.844 (72.24)	.750 (19.05)	.989 (25.12)	1.344 (34.14)	1.062 (26.97)	1.375 (34.93)	.120 (3.05)	1.593 (40.46)	1.061 (26.95)	2.250 (57.15)
20	.625 (15.88)	.724 (18.39)	.180 (4.57)	1.400 (35.56)	3.250 (82.55)	.750 (19.05)	1.145 (29.08)	1.469 (37.31)	1.156 (29.36)	1.500 (38.10)	.120 (3.05)	1.656 (42.06)	1.123 (28.52)	2.312 (58.72)
22	.625 (15.88)	.724 (18.39)	.180 (4.57)	1.400 (35.56)	3.250 (82.55)	.750 (19.05)	1.270 (32.26)	1.594 (40.49)	1.250 (31.75)	1.625 (41.28)	.120 (3.05)	1.718 (43.64)	1.186 (30.12)	2.312 (58.72)
24	.625 (15.88)	.724 (18.39)	.203 (5.16)	1.400 (35.56)	3.719 (94.46)	.812 (20.62)	1.395 (35.43)	1.719 (43.66)	1.375 (34.93)	1.750 (44.45)	.147 (3.73)	1.890 (48.01)	1.263 (32.08)	2.531 (64.29)
28	.625 (15.88)	.724 (18.39)	.203 (5.16)	1.400 (35.56)	3.719 (94.46)	.812 (20.62)	1.614 (41.00)	1.969 (50.01)	1.562 (39.67)	2.000 (50.80)	.147 (3.73)	1.968 (49.99)	1.342 (34.09)	2.531 (64.29)
32	.625 (15.88)	.724 (18.39)	.203 (5.16)	1.400 (35.56)	4.188 (106.38)	.875 (22.23)	1.864 (47.35)	2.219 (56.36)	1.750 (44.45)	2.250 (57.15)	.173 (4.39)	2.187 (55.55)	1.561 (39.65)	2.750 (69.85)
36	.625 (15.88)	.724 (18.39)	.203 (5.16)	1.400 (35.56)	4.297 (109.14)	.875 (22.23)	2.051 (52.10)	2.469 (62.71)	1.938 (49.23)	2.500 (63.50)	.173 (4.39)	2.406 (61.11)	1.780 (45.21)	2.875 (73.02)
40	.625 (15.88)	.724 (18.39)	.203 (5.16)	1.400 (35.56)	7.211 (183.16)†	.875 (22.23)	2.390 (60.71)	2.723 (69.16)†	2.188 (55.58)	2.750 (69.85)	.173 (4.39)	5.875 (149.22)	-	5.690 (144.53)

† Not to MS specification

Performance Specifications - Page A-84

Contact, Ceiling Plugs, Assembly Tools - Page A-105

Contact Arrangements - Page A-85 – A-89

Shell Size	A Thread Box Mounting Receptacle	A Thread 90° Angle Plug
8S	1/2-28UNEF-2A	1/2-28UNEF-2B
10S	5/8-24UNEF-2A	5/8-24UNEF-2B
10SL	5/8-24UNEF-2A	5/8-24UNEF-2B
12S	3/4-20UNEF-2A	3/4-20UNEF-2B
14S	7/8-20UNEF-2A	7/8-20UNEF-2B
16S	1-20UNEF-2A	1-20UNEF-2B
12	3/4-20UNEF-2A	3/4-20UNEF-2B
14	7/8-20UNEF-2A	7/8-20UNEF-2B

Shell Size	A Thread Box Mounting Receptacle	A Thread 90° Angle Plug
16	1-20UNEF-2A	1-20UNEF-2B
18	1-1/8-18UNEF-2A	1-1/8-18UNEF-2B
20	1-1/4-18UNEF-2A	1-1/4-18UNEF-2B
22	1-3/8-18UNEF-2A	1-3/8-18UNEF-2B
24	1-1/2-18UNEF-2A	1-1/2-18UNEF-2B
28	1-3/4-18UNS-2A	1-3/4-18UNS-2B
32	2-18UNS-2A	2-18UNS-2B
36	2-1/4-16UN-2A	2-1/4-16UN-2B
40	2-1/2-16UN-2A	2-1/2-16UN-2B

Components

MS3106R CA3106R Straight Plug	MS3106F CA06R Straight Plug	MS3106E* CA3106E Straight Plug	MS3108E CA3108E 90° Angle Plug	MS3108R CA3108R 90° Angle Plug

Endbell

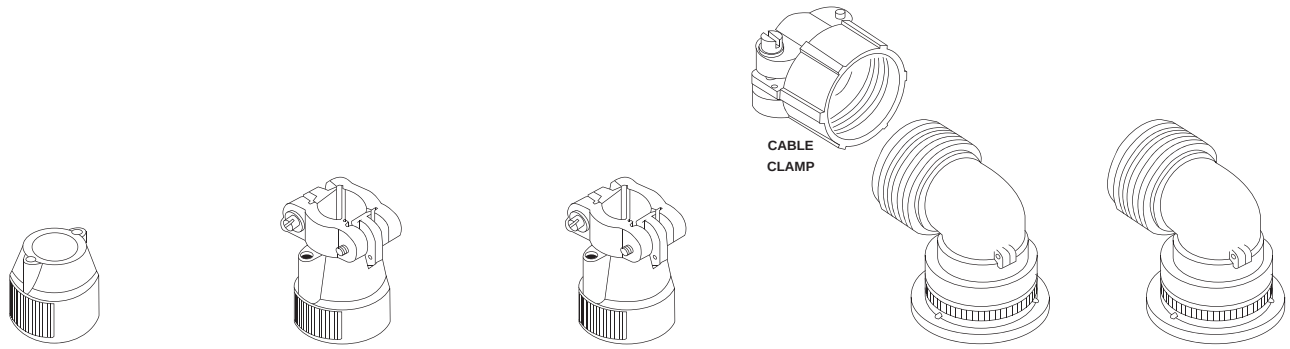

Ferrule

Grommet

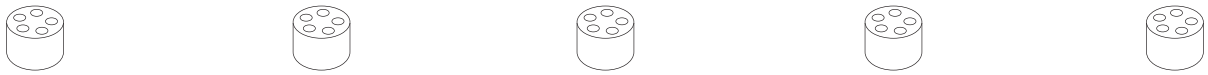

Pin Contacts

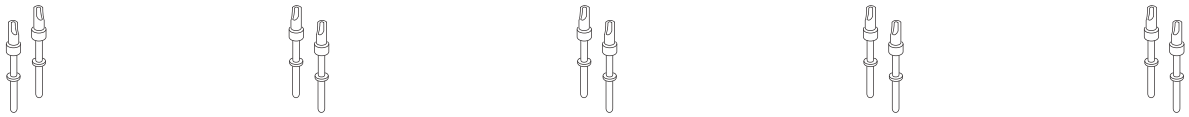

Insulator

Coupling Nut

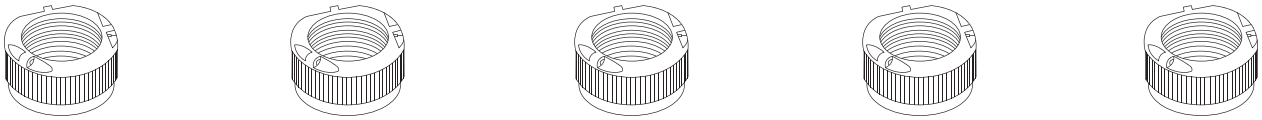

Barrel

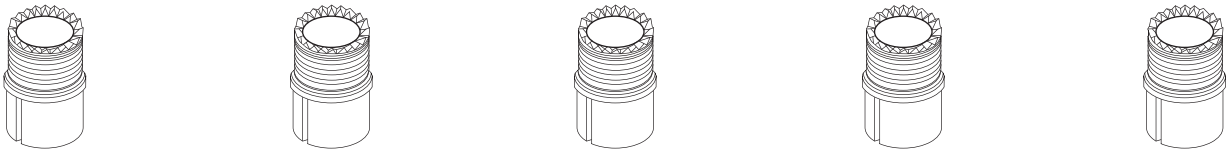

O Ring

Note: Class F is not applicable to MS3108 shell style.

*** Class E inactive for new design. Use Class F or R.**

Dimensions shown in inches (mm)
Specifications and dimensions subject to change

How To Order

MS type potting connectors are available with nylon cups. 00 and 06 shell styles with plastic cups and resilient insulators meet the requirements of MS3103 and MS25183. Also available is the 08 plug with resilient insulator and 90° angle nylon potting cup.

ITT Cannon provides for a 1/4" clearance for potting on all contact sizes.

MS	25183	-	18	-	10	P
MS	3103	-	18	-	10	P
CA	3100	ER	18	-	10	P

PREFIX
SHELL STYLE
CLASS
SHELL SIZE
CONTACT ARRANGEMENTS
CONTACT TYPE

PREFIX
CA - ITT Cannon prefix indicating special application or variation of MS

SHELL STYLE
3100 - Wall mounting receptacle (MS3103)
3106 - Straight Plug (MS325183)
3108 - 90° angle plug

CLASS
ER - Resilient insulator, nylon potting cup and thread attachment ring
No class designator for MS types.

SHELL STYLE
Coupling thread diameter figured in sixteenths of an inch

CONTACT ARRANGEMENTS
See pages A-85 – A-89

CONTACT TYPE
P - Pin
S - Socket

Wall Mounting Receptacle

MS3103
Nylon Potting Cup
Threaded Attachment Ring

CA3100ER

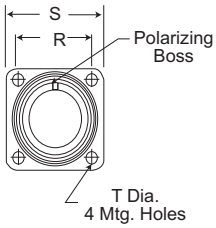

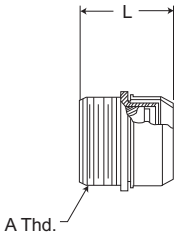

The CA3100ER receptacle (MS3103) is supplied with a resilient insulator and nylon potting cup with a threaded attachment ring. This receptacle mates with 3106 and 3108 plugs.

Shell Size	L Max.	R ± .005 (±0.13)	S Max.	R +.010 (+0.25) -.005 (-.031)	A Thread
8S	1.531 (38.89)	.594 (15.09)	.906 (23.01)	.120 (3.05)	1/2-28UNEF-2A
10S	1.531 (38.89)	.719 (18.26)	1.031 (26.19)	.120 (3.05)	5/8-24NEF-2A
10SL	1.531 (38.89)	.719 (18.26)	1.031 (26.19)	.120 (3.05)	5/8-24NEF-2A
12S	1.531 (38.89)	.812 (20.62)	1.125 (28.58)	.120 (3.05)	3/4-20UNEF-2A
14S	1.531 (38.89)	.906 (23.01)	1.219 (30.96)	.120 (3.05)	7/8-20UNEF-2A
16S	1.531 (38.89)	.969 (24.61)	1.312 (33.32)	.120 (3.05)	1-20UNEF-2A
12	1.968 (49.99)	.812 (20.62)	1.125 (28.58)	.120 (3.05)	3/4-20UNEF-2A
14	1.968 (49.99)	.906 (23.01)	1.219 (30.96)	.120 (3.05)	3/4-20UNEF-2A
16	1.968 (49.99)	.969 (24.61)	1.312 (33.32)	.120 (3.05)	1-20UNEF-2A
18	1.968 (49.99)	1.062 (26.97)	1.406 (35.71)	.120 (3.05)	1-1/8-180NEF-2A
20	2.188 (55.58)	1.156 (29.36)	1.531 (38.89)	.120 (3.05)	1-1/4-18NEF-2A
22	2.188 (55.58)	1.250 (31.75)	1.656 (42.06)	.120 (3.05)	1-3/8-18NEF-2A
24	2.188 (55.58)	1.375 (34.93)	1.781 (45.24)	.147 (3.73)	1-1/2-18NEF-2A
28	2.188 (55.58)	1.562 (39.67)	2.031 (51.59)	.147 (3.73)	1-3/4-18NS-2A
32	2.188 (55.58)	1.750 (44.45)	2.281 (57.94)	.173 (4.39)	2-18NS-2A
36	2.188 (55.58)	1.938 (49.23)	2.531 (64.29)	.173 (4.39)	2-1/4-16UN-2A

Performance Specifications - Page A-84

Contact, Ceiling Plugs, Assembly Tools - Page A-105

Contact Arrangements - Page A-85 – A-89

Dimensions shown in inches (mm)
Specifications and dimensions subject to change

Straight Plug

MS25183
Nylon Potting Cup
Rubber Gasket

CA3106ER

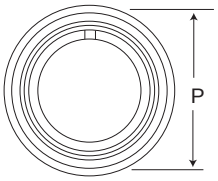

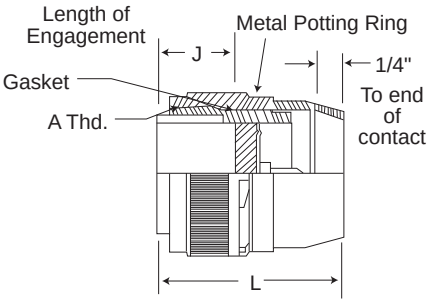

The CA3106ER plug is supplied with resilient insulators, nylon potting cups with threaded attachment rings, and a rubber gasket under the coupling nut. This plug mates with 3100, 3101 and 3102 recaptacles.

90° Angle Plug

Nylon Potting Cup
Rubber Gasket

CA3108ER

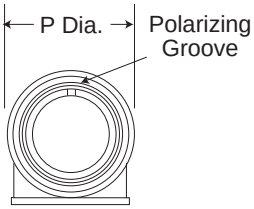

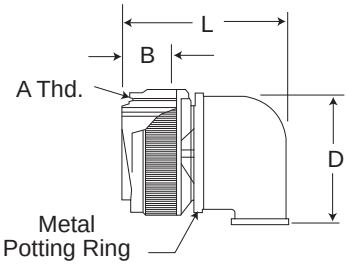

The CA3108ER is supplied with resilient insulator, 90º nylon potting cup and threaded attachment ring with a rubber gasket under the coupling nut. This plug mates with 3100, 3101 and 3102 receptacles.

CA3106ER					CA3108ER					
							L Max.			
Shell Size	J Max.	L Max.	P Max.	A Thread	B Max.	D Max.	For Arr. w/#16 &#12 Contacts	For Arr. w/#8 &#4 Contacts	P Max.	A Thread
8S	.536 (13.61)	1.562 (39.67)	.844 (21.44)	1/2-28UNEF-2B	-	-	-	-	-	-
10S	.536 (13.61)	1.562 (39.67)	.969 (21.44)	5/8-24UNEF-2B	-	-	-	-	-	-
10SL	.536 (13.61)	1.562 (39.67)	.969 (21.44)	5/8-24UNEF-2B	.563(13.61)	1.040(26.42)	1.463(37.16)	-	969(24.61)	5/8-24UNEF-2B
12S	.536 (13.61)	1.562 (39.67)	1.062 (21.44)	3/4-20UNEF-2B	.563(13.61)	1.040(26.42)	1.600(40.64)	-	1.062(26.97)	3/4-24UNEF-2B
14S	.536 (13.61)	1.562 (39.67)	1.156 (21.44)	7/8-20UNEF-2B	.563(13.61)	1.040(26.42)	1.600(40.64)	2.300(58.42)	1.156(29.36)	7/8-20UNEF-2B
16S	.536 (13.61)	1.562 (39.67)	1.250 (21.44)	1-20UNEF-2B	.563(13.61)	1.290(32.77)	1.600(40.64)	2.550(64.77)	1.250(31.75)	1-20UNEF-2B
12	.724 (18.39)	2.000 (50.80)	1.062 (26.97)	3/4-20UNEF-2B	.724(18.39)	1.040(26.42)	1.910(48.51)	-	1.062(26.97)	3/4-20UNEF-2B
14	.724 (18.39)	2.000 (50.80)	1.156 (29.36)	7/8-20UNEF-2B	.724(18.39)	1.040(26.42)	1.910(48.51)	2.610(66.29)	1.156(29.36)	7/8-20UNEF-2B
16	.724 (18.39)	2.000 (50.80)	1.250 (31.75)	1-20UNEF-2B	.724(18.39)	1.290(32.77)	1.910(48.51)	2.850(72.39)	1.250(31.75)	1-20UNEF-2B
18	.724 (18.39)	2.000 (50.80)	1.344 (34.14)	1-1/8-18UNEF-2B	.724(18.39)	1.290(32.77)	2.100(53.34)	2.850(72.39)	1.344(34.14)	1-1/8-18UNEF-2B
20	.724 (18.39)	2.125 (53.98)	1.469 (37.31)	1-1/4-18UNEF-2B	.724(18.39)	1.540(39.12)	2.100(53.34)	2.850(72.39)	1.469(37.31)	1-1/4-18UNEF-2B
22	.724 (18.39)	2.125 (53.98)	1.594 (40.49)	1-3/8-18UNEF-2B	.724(18.39)	1.540(39.12)	2.100(53.34)	2.850(72.39)	1.594(40.49)	1-3/8-18UNEF-2B
24	.724 (18.39)	2.125 (53.98)	1.719 (43.66)	1-1/2-18UNEF-2B	.724(18.39)	1.790(45.47)	2.281(57.94)	2.985(75.82)	1.719(43.66)	1-1/2-18UNEF-2B
28	.724 (18.39)	2.125 (53.98)	1.969 (50.01)	1-3/4-18UNS-2B	.724(18.39)	2.040(51.82)	2.485(63.12)	2.985(75.82)	1.969(50.01)	1-3/4-18UNS-2B
32	.724 (18.39)	2.180 (55.37)	1.219 (30.96)	2-18UNS-2B	.724(18.39)	2.290(58.17)	2.485(63.12)	2.985(75.82)	1.219(30.96)	2-18UNS-2B
36	.724 (18.39)	2.180 (55.37)	2.469 (62.71)	2-1/4-16UN-2B	.724(18.39)	2.540(64.52)	2.485(63.12)	2.985(75.82)	2.469(62.71)	2-1/4-16UN-2B
40	.724 (18.39)	2.180 (55.37)	2.723 (69.16)	2-1/2-16UN-2B						

Performance Specifications - Page A-84

Contact, Ceiling Plugs, Assembly Tools - Page A-105

Contact Arrangements - Page A-85 – A-89

Dimensions shown in inches (mm)
Specifications and dimensions subject to change

Straight Plug with Shrink Boot Adapter

CA3106E-DN

CA3106E-DN is a straight plug with endbell for shrink boot adapters. Crimp and solder versions are available (please indicate ...F80 or ...F183). CA3106-DN mate with 3100, 3101 and 3102 shell styles.

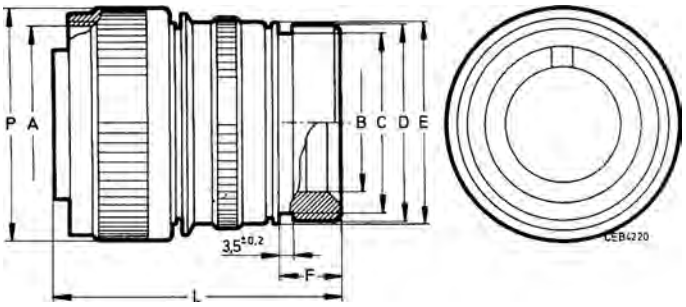

Order reference Pin insert*	A Thread	B min.	C max.	D ±0.2	E ±0,2	F 0,5	L max.	P max.
CA3106E10SL-**-P-DN	5/8-24NEF-2B	7,7	13,2	15,5	17,0	11,7	11,7	50,0
CA3106E12S-**-P-DN	3/4-20UNEF-2B	7,9	13,2	15,5	17,8	11,8	58,8	25,6
CA3106E14S-**-P-DN	7/8-20UNEF-2B	10,6	17,0	19,1	19,1	11,7	50,0	28,6
CA3106E16S-**-P-DN	1-20UNEF-2B	13,5	21,9	23,9	23,9	11,5	50,0	31,8
CA3106E12-**-P-DN	3/4-20UNEF-2B	7,9	13,2	15,5	17,8	11,7	50,0	25,6
CA3106E14-**-P-DN	7/8-20UNEF-2B	10,6	17,0	19,1	20,1	11,7	60,0	28,6
CA3106E16-**-P-DN	1-20UNEF-2B	13,5	21,9	23,9	23,5	11,5	60,0	31,8
CA3106E18-**-P-DN	1-1/8-18NEF-2B	14,6	21,9	23,9	26,5	12,7	60,0	34,1
CA3106E20-**-P-DN	1-1/4-18NEF-2B	18,5	26,6	29,6	30,2	12,7	65,0	37,3
CA3106E22-**-P-DN	1-3/8-18NEF-2B	20,8	26,2	29,6	33,6	12,7	65,0	40,5
CA3106E24-**-P-DN	1-1/2-16NEF-2B	24,6	34,5	37,8	36,1	12,7	65,0	43,8
CA3106E28-**-P-DN	1-3/4-18NS-2B	27,0	34,5	37,8	41,4	12,7	65,0	50,0
CA3106E32-**-P-DN	2-18NS-2B	33,3	43,6	47,8	48,6	15,2	70,0	56,3
CA3106E36-**-P-DN	2-1/4-16UN-2B	38,5	43,6	47,8	54,8	15,2	80,0	62,7

*For socket inserts substitute S for P
**Add contact arrangement number (see pages A-85 – A-89)

How To Order

TBF and BFR pressurized bulkhead receptacles mate with standard MS type plugs (3106 and 3108) if contact arrangements correspond. Both the BFR and TBF have resilient insulators. The TBF (thru bulkhead fitting) version has a double faced construction allowing mating from both ends. An O-ring is supplied as standard on both the BFR and TBF. Contacts are silver plated copper or brass alloy. Shells are aluminum alloy.

BFR 14S - S P * 1
TBF 20 - 15 PS *

PREFIX
SHELL SIZE
CONTACT ARRANGEMENT
CONTACT TYPE
ALTERNATE POSITION
MOUNTING (BFR ONLY)

PREFIX
BFR - Bulkhead fittings
TBF - Thru bulkhead fittings

SHELL SIZE
Coupling thread diameter figured in sixteenths of an inch.

CONTACT ARRANGEMENTS
See pages A-85 – A-89

CONTACT TYPE
P - Pin; S - Socket;
PS - pin and socket (TBF only)

ALTERNATE POSITION
(Consult factory for available alternate positions.)

MOUNTING
-1 obligatory code, BFR only

Thru-Bulkhead Receptacle

TBF - Resilient Insulator

Pin Insert Ends

Socket Insert Ends

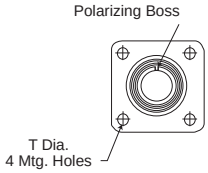

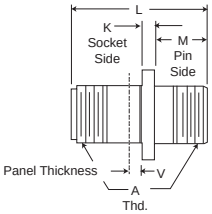

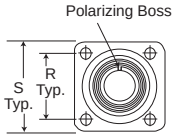

TBF thru-bulkhead fittings have pressurized resilient insulators. Special double-faced pin and socket contact construction permits cable components to be wired and tested in the shop and then to be plugged into the mounted TBF plug to complete the installation. The TBF mates with 3106, 3107 and 3108 plugs.

Shell Size	K Max.	L Max.	M +.031 (0.79) -.000 (0.00)	R ±.005 (0.13)	S ±.031 (0.79)	T +.010 (0.25) -.005 (0.13)	V Max.	A Thread
8S	.125 (3.18)	1.482 (37.64)	.562 (14.27)	.594 (15.09)	.875 (22.22)	.120 (3.05)	.325 (8.26)	1/2-28UNEF-2A
10S	.125 (3.18)	1.482 (37.64)	.562 (14.27)	.179 (18.26)	1.000 (25.40)	.120 (3.05)	.325 (8.26)	5/8-24UNEF-2A
10SL	.125 (3.18)	1.482 (37.64)	.562 (14.27)	.179 (18.26)	1.000 (25.40)	.120 (3.05)	.325 (8.26)	5/8-24UNEF-2A
12S	.140 (3.56)	1.482 (37.64)	.562 (14.27)	.812 (20.62)	1.094 (27.79)	.120 (3.05)	.325 (8.26)	3/4-20UNEF-2A
14S	.140 (3.56)	1.482 (37.64)	.562 (14.27)	.906 (23.01)	1.188 (30.18)	.120 (3.05)	.325 (8.26)	7/8-20UNEF-2A
16S	.140 (3.56)	1.482 (37.64)	.562 (14.27)	.968 (24.59)	1.281 (32.54)	.120 (3.05)	.325 (8.26)	1-20UNEF-2A
12	.146 (3.71)	2.030 (51.56)	.750 (19.05)	.812 (20.62)	1.094 (27.79)	.120 (3.05)	.445 (11.30)	3/4-20UNEF-2A
14	.146 (3.71)	2.030 (51.56)	.750 (19.05)	.906 (23.01)	1.188 (30.18)	.120 (3.05)	.445 (11.30)	7/8-20UNEF-2A
16	.146 (3.71)	2.030 (51.56)	.750 (19.05)	.968 (24.59)	1.281 (32.54)	.120 (3.05)	.445 (11.30)	1-20UNEF-2A
18	.180 (4.57)	2.030 (51.56)	.750 (19.05)	1.062 (26.97)	1.375 (34.92)	.120 (3.05)	.445 (11.30)	1-1/8-18UNEF-2A
20	.180 (4.57)	2.030 (51.56)	.750 (19.05)	1.156 (29.36)	1.500 (38.10)	.120 (3.05)	.445 (11.30)	1-1/4-18UNEF-2A
22	.180 (4.57)	2.030 (51.56)	.750 (19.05)	1.250 (31.75)	1.625 (34.28)	.120 (3.05)	.445 (11.30)	1-3/8-18UNEF-2A
24	.203 (5.16)	2.030 (51.56)	.812 (20.62)	1.375 (34.92)	1.750 (44.45)	.147 (3.73)	.383 (9.73)	1-1/2-18UNEF-2A
28	.203 (5.16)	2.030 (51.56)	.812 (20.62)	1.562 (39.67)	2.000 (50.80)	.147 (3.73)	.383 (9.73)	1-3/4-18UNS-2A
32	.203 (5.16)	2.030 (51.56)	.875 (22.22)	1.750 (44.45)	2.250 (57.15)	.173 (4.39)	.320 (8.13)	2-18UNS-2A
36	.203 (5.16)	2.030 (51.56)	.812 (20.62)	1.938 (49.23)	2.500 (63.50)	.173 (4.39)	.383 (9.73)	2-1/4-16UN-2A
40	.203 (5.16)	2.030 (51.56)	.875 (22.22)	2.188 (55.58)	2.750 (69.85)	.173 (4.39)	.383 (9.73)	

Performance Specifications - Page A-84 **Contacts, Sealing Plugs, Assembly Tools - Page A-105** **Contact Arrangements - Page A-85 – A-89**

Dimensions shown in inches (mm)
Specifications and dimensions subject to change

Pressurized Bulkhead Receptacle

BFR

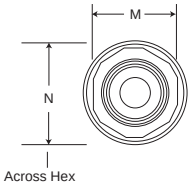

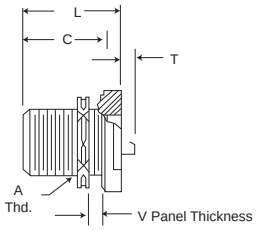

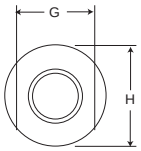

Standard Position
Pin is 3/32" Dia.

TYPE 1

BFR pressurized bulkhead receptacles withstand the air leakage requirements of MIL-C-5015 not to exceed 1 cu. in. of air per hour when subjected to a pressure differential of 30 psi at -55°C. Insulators are resilient material bonded to aluminum shell. Both pin and socket assemblies are available. The BFR will mate with standard MS type 3106 and 3108 plugs.

Shell	Standard
Insulator	Polychloroprene
Lock Nut	Hex with 6 wire holes
O Ring	Neoprene
Position Pin	Standard
Mounting	Figure 1 or 2
Part No. Example	BFR-14S-SP-1

Shell Size	C Max.	G Max.	H Max.	L Max.	M Max.	N Max.	#16	T Max. Solder Pot Ext. #12	#8	#4	#0	V Max.
8S	.853 (21.67)	.895 (22.73)	1.077 (27.36)	1.087 (27.61)	.702 (17.83)	.820 (20.83)	.140 (3.56)	-	-	-	-	.250 (6.35)
10S	.853 (21.67)	1.015 (25.78)	1.203 (30.56)	1.087 (27.61)	.822 (20.88)	.960 (24.38)	.140 (3.56)	-	-	-	-	.250 (6.35)
10SL	.853 (21.67)	1.015 (25.78)	1.203 (30.56)	1.087 (27.61)	.822 (20.88)	.960 (24.38)	.140 (3.56)	-	-	-	-	.250 (6.35)
12S	.853 (21.67)	1.077 (27.36)	1.327 (33.71)	1.087 (27.61)	.955 (24.26)	1.110 (28.19)	.140 (3.56)	-	-	-	-	.250 (6.35)
14S	.853 (21.67)	1.203 (30.56)	1.453 (36.91)	1.087 (27.61)	1.072 (27.23)	1.250 (31.75)	.140 (3.56)	-	-	-	-	.375 (9.52)
16S	.853 (21.67)	1.327 (33.71)	1.577 (40.06)	1.087 (27.61)	1.265 (32.13)	1.460 (37.08)	.140 (3.56)	-	-	-	-	.375 (9.52)
12	1.244 (31.60)	1.077 (27.36)	1.327 (33.71)	1.525 (38.74)	.955 (24.26)	1.110 (28.19)	.062 (1.57)	.062 (1.57)	-	-	-	.375 (9.52)
14	1.244 (31.60)	1.203 (30.56)	1.453 (36.91)	1.525 (38.74)	1.072 (27.23)	1.250 (31.75)	.062 (1.57)	.062 (1.57)	.125 (3.18)	-	-	.375 (9.52)
16	1.244 (31.60)	1.327 (33.71)	1.577 (40.06)	1.525 (38.74)	1.265 (32.13)	1.460 (37.08)	.062 (1.57)	.062 (1.57)	.125 (3.18)	.125 (3.18)	-	.375 (9.52)
18	1.244 (31.60)	1.453 (36.91)	1.703 (43.26)	1.525 (38.74)	1.395 (35.43)	1.610 (40.89)	.062 (1.57)	.062 (1.57)	.125 (3.18)	.125 (3.18)	-	.375 (9.52)
20	1.244 (31.60)	1.577 (40.06)	1.827 (46.41)	1.525 (38.74)	1.515 (38.48)	1.750 (44.45)	.062 (1.57)	.062 (1.57)	.125 (3.18)	.125 (3.18)	.359 (9.12)	.375 (9.52)
22	1.244 (31.60)	1.577 (40.06)	1.953 (49.61)	1.525 (38.74)	1.635 (41.53)	1.900 (48.26)	.062 (1.57)	.062 (1.57)	.125 (3.18)	.125 (3.18)	.359 (9.12)	.375 (9.52)
24	1.244 (31.60)	1.827 (48.41)	2.077 (52.76)	1.525 (38.74)	1.765 (44.83)	2.030 (51.56)	.062 (1.57)	.062 (1.57)	.125 (3.18)	.125 (3.18)	.359 (9.12)	.375 (9.52)
28	1.244 (31.60)	1.953 (49.61)	2.327 (59.11)	1.525 (38.74)	2.015 (51.18)	2.330 (59.18)	.062 (1.57)	.062 (1.57)	.125 (3.18)	.125 (3.18)	.359 (9.12)	.375 (9.52)
32	1.244 (31.60)	2.203 (55.96)	2.577 (65.45)	1.525 (38.74)	2.205 (56.01)	2.550 (64.77)	.062 (1.57)	.062 (1.57)	.125 (3.18)	.125 (3.18)	.359 (9.12)	.375 (9.52)
36	1.244 (31.60)	2.577 (65.46)	2.827 (71.81)	1.525 (38.74)	2.455 (62.36)	2.840 (72.14)	.062 (1.57)	.062 (1.57)	.125 (3.18)	.125 (3.18)	.359 (9.12)	.312 (7.92)

Performance Specifications - Page A-84

Contact, Ceiling Plugs, Assembly Tools - Page A-105

Contact Arrangements - Page A-85 – A-89

Shell Size	A Thread
8S	1/2-28UNEF-2A
10S	5/8-24UNEF-2A
10SL	5/8-24UNEF-2A
12S	3/4-20UNEF-2A
14S	7/8-20UNEF-2A
16S	1-20UNEF-2A
12	3/4-20UNEF-2A
14	7/8-20UNEF-2A

Shell Size	A Thread
16	1-20UNEF-2A
18	1-1/8-18UNEF-2A
20	1-1/4-18UNEF-2A
22	1-3/8-18UNEF-2A
24	1-1/2-18UNEF-2A
28	1-3/4-18UNS-2A
32	2-18UNS-2A
36	2-1/4-16UN-2A

Mounting Dimensions

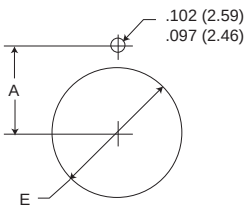

Fig. 1

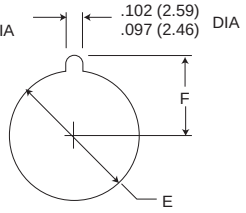

Fig. 2

Shell Size	A ±.005 (0.13)	E +.015 (0.38) -.000 (0.00)	F ±.005 (0.13)
8S	.323 (8.20)	.500 (12.70)	.373 (9.47)
10S, 10SL	.385 (9.78)	.625 (15.88)	.435 (11.05)
12S, 12	.448 (11.38)	.750 (19.05)	.498 (12.65)
14S, 14	.510 (12.95)	.875 (22.22)	.560 (14.22)
16S, 16	.573 (14.55)	1.000 (25.40)	.623 (15.82)
18	.635 (16.13)	1.125 (28.58)	.685 (17.40)

Shell Size	A ±.005 (0.13)	E +.015 (0.38) -.000 (0.00)	F ±.005 (0.13)
20	.698 (17.73)	1.250 (31.75)	.748 (19.00)
22	.760 (19.30)	1.375 (34.92)	.810 (20.57)
24	.823 (20.90)	1.500 (38.10)	.873 (22.17)
28	.948 (24.08)	1.750 (44.45)	.998 (25.35)
32	1.073 (27.25)	2.000 (50.80)	1.123 (28.52)
36	1.198 (30.43)	2.250 (57.15)	1.248 (31.70)

Dimensions shown in inches (mm)
Specifications and dimensions subject to change

Panel Cutouts

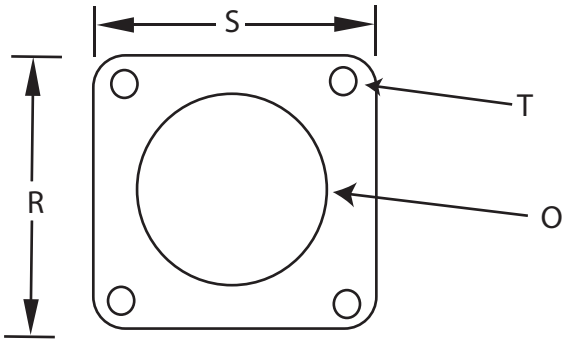

DIM TOL Shell Size	±.005 R	±.031 S	O	±.005 T
8S	.594	.875	.562	.120
10S & 10SL	.719	1.000	.688	.120
12 & 12S	.812	1.094	.812	.120
14 & 14S	.906	1.188	.938	.120
16 & 16S	.969	1.281	1.062	.120
18	1.062	1.375	1.188	.120
20	1.156	1.500	1.312	.120
22	1.250	1.625	1.438	.120
24	1.375	1.750	1.562	.147
28	1.562	2.000	1.812	.147
32	1.750	2.250	2.062	.173
36	1.938	2.500	2.312	.173
40	2.188	2.750	2.562	.173

Flange dimensions and mounting holes for 5015 type MS receptacles. Mounting hole diameters do not apply to MS5015 class KT & KS connectors.

Plug Metal Protective Caps

MS25042

CA17530
CA19741

For 06 and 08 Style Plugs

These externally threaded metal dust caps are used to protect the MS3106 and MS3108 plugs. Material is aluminum alloy. They are furnished with sash chain or less sash chain.

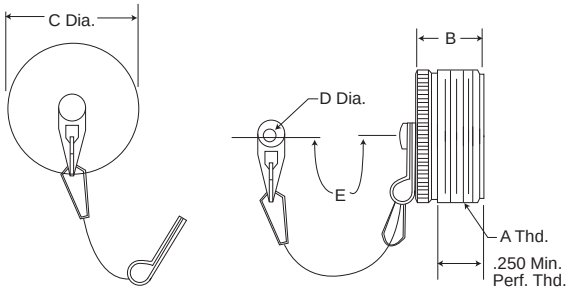

Black Anodized Finish With Sash Chain MS	Black Anodized Finish With Sash Chain ITT Cannon	Superceded MS Number (Ref)	Part Number Olive Drab Chromate Over Cadmium Finish with Sash Chain May Still be Purchased by ITTC Part Number	Olive Drab Chromate Over Cadmium Finish Without Sash Chain ITTC Part Number	Fits Shell Size	B Max.	C Dia. Max.	E Max.	D Dia. Max.	A Thread
MS25042-8DA	CA17530-8000	MS25042-8D	CA17530-5100	CA19741-8	8S	.656 (16.66)	.562 (14.27)	4.500 (114.30)	.166 (4.22)	1/2-28UNEF-2A
MS25042-10DA	CA17530-8001	MS25042-10D	CA17530-5101	CA19741-10	10S, 10SL	.656 (16.66)	.687 (17.45)	4.500 (114.30)	.166 (4.22)	5/8-24UNEF-2A
MS25042-12DA	CA17530-8002	MS25042-12D	CA17530-5102	CA19741-12	12, 12S	.844 (21.44)	.812 (20.62)	5.500 (139.70)	.166 (4.22)	3/4-20UNEF-2A
MS25042-14DA	CA17530-8003	MS25042-14D	CA17530-5103	CA19741-14	14, 14S	.844 (21.44)	.937 (23.80)	5.500 (139.70)	.166 (4.22)	7/8-20UNEF-2A
MS25042-16DA	CA17530-8004	MS25042-16D	CA17530-5104	CA19741-16	16, 16S	.844 (21.44)	1.062 (26.97)	5.500 (139.70)	.166 (4.22)	1-20UNEF-2A
MS25042-18DA	CA17530-8005	MS25042-18D	CA17530-5105	CA19741-18	18	.844 (21.44)	1.187 (30.15)	5.500 (139.70)	.166 (4.22)	1-1/8-18UNEF-2A
MS25042-20DA	CA17530-8006	MS25042-20D	CA17530-5106	CA19741-20	20	.844 (21.44)	1.312 (33.32)	5.500 (139.70)	.197 (5.00)	1-1/4-18UNEF-2A
MS25042-22DA	CA17530-8007	MS25042-22D	CA17530-5107	CA19741-22	22	.844 (21.44)	1.437 (36.50)	5.500 (139.70)	.197 (5.00)	1-3/8-18UNEF-2A
MS25042-24DA	CA17530-8008	MS25042-24D	CA17530-5108	CA19741-24	24	.844 (21.44)	1.562 (39.67)	6.000 (152.40)	.197 (5.00)	1-1/2-18UNEF-2A
MS25042-28DA	CA17530-8009	MS25042-28D	CA17530-5109	CA19741-28	28	.844 (21.44)	1.812 (46.02)	8.250 (209.55)	.197 (5.00)	1-3/4-18UNEF-2A
MS25042-32DA	CA17530-8010	MS25042-32D	CA17530-5110	CA19741-32	32	.844 (21.44)	2.062 (52.37)	8.250 (209.55)	.228 (5.79)	2-18UNEF-2A
MS25042-36DA	CA17530-8011	MS25042-36D	CA17530-5111	CA19741-36	36	.844 (21.44)	2.312 (58.72)	8.250 (209.55)	.228 (5.79)	2-1/4-16UN-2A
MS25042-40DA	CA17530-8012	MS25042-40D	CA17530-5112	CA19741-40	40	.844 (21.44)	2.562 (65.07)	8.250 (209.55)	.228 (5.79)	2-1/2-16UN-2A
MS25042-44DA	CA17530-8013	MS25042-44D	CA17530-5113	CA19741-44	44	.844 (21.44)	2.812 (71.42)	8.250 (209.55)	.228 (5.79)	2-3/4-16UN-2A
MS25042-48DA	CA17530-8014	MS25042-48D	CA17530-5114	CA19741-48	48	.844 (21.44)	3.062 (77.77)	8.250 (209.55)	.228 (5.79)	3-16UN-2A

Plug Metal Protective Caps

MS25043

CA2209
CA2322

For 00, 01 and 02 Style Receptacles

These internally threaded metal dust caps are used to protect the MS3100, MS3101 and MS3102 receptacles. Material is aluminum alloy. They are furnished with sash chain or less sash chain.

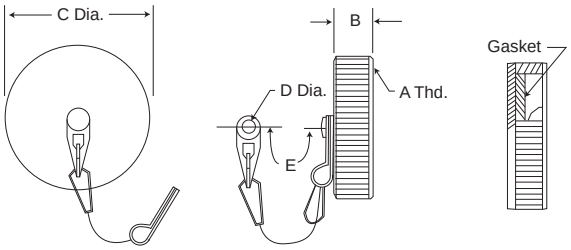

Black Anodized Finish With Sash Chain MS	Black Anodized Finish With Sash Chain ITT Cannon	Superceded MS Number (Ref)	Part Number Olive Drab Chromate Over Cadmium Finish with Sash Chain May Still be Purchased by ITTC Part Number	Olive Drab Chromate Over Cadmium Finish Without Sash Chain ITTC Part Number	Fits Shell Size	B Max.	C Dia. Max.	E Max.	D Dia. Max.	A Thread
MS25043-8DA	CA2209-8000	MS25043-8D	CA2209-5100	CA2322-1	8S	.469 (11.91)	.688 (17.48)	4.500 (114.30)	.150 (3.81)	1/2-28UNEF-2B
MS25043-10DA	CA2209-8001	MS25043-10D	CA2209-5101	CA2322-2	10S, 10SL	.469 (11.91)	.815 (20.70)	4.500 (114.30)	.150 (3.81)	5/8-24UNEF-2B
MS25043-12DA	CA2209-8002	MS25043-12D	CA2209-5102	CA2322-3	12, 12S	.469 (11.91)	1.000 (25.40)	5.500 (139.70)	.150 (3.81)	3/4-20UNEF-2B
MS25043-14DA	CA2209-8003	MS25043-14D	CA2209-5103	CA2322-4	14, 14S	.469 (11.91)	1.125 (28.58)	5.500 (139.70)	.150 (3.81)	7/8-20UNEF-2B
MS25043-16DA	CA2209-8004	MS25043-16D	CA2209-5104	CA2322-5	16, 16S	.469 (11.91)	1.188 (30.18)	5.500 (139.70)	.150 (3.81)	1-20UNEF-2B
MS25043-18DA	CA2209-8005	MS25043-18D	CA2209-5105	CA2322-6	18	.469 (11.91)	1.344 (34.14)	5.500 (139.70)	.150 (3.81)	1-1/8-18UNEF-2B
MS25043-20DA	CA2209-8006	MS25043-20D	CA2209-5106	CA2322-7	20	.469 (11.91)	1.469 (37.31)	5.500 (139.70)	.150 (3.81)	1-1/4-18UNEF-2B
MS25043-22DA	CA2209-8007	MS25043-22D	CA2209-5107	CA2322-8	22	.469 (11.91)	1.594 (40.49)	5.500 (139.70)	.150 (3.81)	1-3/8-18UNEF-2B
MS25043-24DA	CA2209-8008	MS25043-24D	CA2209-5108	CA2322-9	24	.469 (11.91)	1.719 (43.66)	6.000 (152.40)	.181 (4.60)	1-1/2-18UNEF-2B
MS25043-28DA	CA2209-8009	MS25043-28D	CA2209-5109	CA2322-10	28	.531 (13.49)	1.969 (50.01)	8.250 (209.55)	.181 (4.60)	1-3/4-18UNS-2B
MS25043-32DA	CA2209-8010	MS25043-32D	CA2209-5110	CA2322-11	32	.531 (13.49)	2.219 (56.36)	8.250 (209.55)	.197 (5.00)	2-18UNS-2B
MS25043-36DA	CA2209-8011	MS25043-36D	CA2209-5111	CA2322-12	36	.531 (13.49)	2.469 (62.71)	8.250 (209.55)	.197 (5.00)	2-1/4-16UN-2B
MS25043-40DA	CA2209-8012	MS25043-40D	CA2209-5112	CA2322-13	40	.531 (13.49)	2.719 (69.06)	8.250 (209.55)	.197 (5.00)	2-1/2-16UN-2B
MS25043-44DA	CA2209-8013	MS25043-44D	CA2209-5113	CA2322-14	44	.531 (13.49)	2.969 (75.41)	8.250 (209.55)	.197 (5.00)	2-3/4-16UN-2B
MS25043-48DA	CA2209-8014	MS25043-48D	CA2209-5114	CA2322-15	48	.531 (13.49)	3.188 (80.98)	8.250 (209.55)	.197 (5.00)	3-16UN-2B

Cable Clamp

M85049-41
With or without bushing

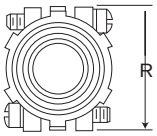

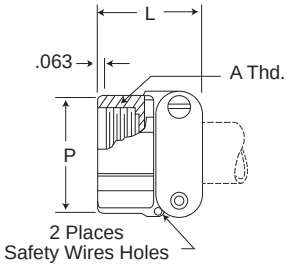

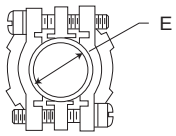

M85049-41 cable clamp is made for plugs and receptacles that have an endbell with external conduit threads. The double clamping action provides a balanced, positive hold on the wires and greatly reduces moisture transmission. Provision is made for safety wiring. This clamp is supplied without bushing; to order bushing, add "with bushing" after part number.

Part Number*	Superceded Part Number	Fits Shell Size	Accommodates MS Bushings	E Min.	E Max.	L ±.031 (0.79)	P ±0.31 (0.79)	R ±0.31 (0.79)	A Thread
M85049/41-3A	MS3057-3A	8S-10S	MS3420-3	.102 (2.59)	.250 (6.35)	.812 (20.62)	.688 (17.48)	.812 (20.62)	1/2-28UNEF-2B
M85049/41-4A	MS3057-4A	10SL, 12S, 12	MS3420-4	.140 (3.56)	.312 (7.92)	.812 (20.62)	.812 (20.62)	.875 (22.22)	5/8-24UNEF-2B
M85049/41-6A	MS3057-6A	14S, 14	MS3420-6	.195 (4.95)	.438 (11.13)	.875 (22.22)	.969 (24.61)	1.062 (26.97)	3/4-20UNEF-2B
M85049/41-8A	MS3057-8A	16S, 16	MS3420-8	.255 (6.48)	.562 (14.27)	.938 (23.83)	1.094 (27.79)	1.156 (29.36)	7/8-20UNEF-2B
M85049/41-10A	MS3057-10A	18	MS3420-10	.285 (7.24)	.625 (15.88)	.938 (23.83)	1.188 (30.18)	1.250 (31.75)	1-20UNEF-2B
M85049/41-12A	MS3057-12A	20, 22	MS3420-12	.350 (8.89)	.750 (19.05)	.938 (23.83)	1.375 (34.92)	1.496 (37.31)	1-3/16-18UNEF-2B
M85049/41-16A	MS3057-16A	24, 28	MS3420-16,12	.468 (11.89)	.938 (23.83)	1.031 (26.19)	1.656 (42.06)	1.688 (42.88)	1-7/16-18UNEF-2B
M85049/41-20A	MS3057-20A	32	MS3420-20,16	.664 (16.87)	1.250 (31.75)	1.094 (27.79)	2.031 (51.59)	2.031 (51.59)	1-3/4-18UNS-2B
M85049/41-24A	MS3057-24A	36	MS3420-24,20	.694 (17.63)	1.375 (34.92)	1.156 (29.36)	2.219 (56.36)	2.281 (57.94)	2-18UNS-2B
M85049/41-28A	MS3057-28A	40	MS3420-24,20	.911 (23.14)	1.625 (41.28)	1.688 (42.88)	2.500 (63.50)	2.688 (68.28)	2-1/4-16UN-2B
M85049/41-32A	MS3057-32A	44	MS3420-32,28,24	-	1.875 (47.62)	1.750 (44.45)	2.781 (70.64)	2.938 (74.63)	2-1/2-16UN-2B
M85049/41-40A	MS3057-40A	48	MS3420-40,32,28	-	2.375 (60.32)	1.750 (44.45)	3.281 (83.34)	3.500 (88.90)	3-16UN-2B

*To order cable clamp with bushing, add "with bushing" after part number.

Telescoping Bushing

MS3420/
MS39056(REF.)

CA18220

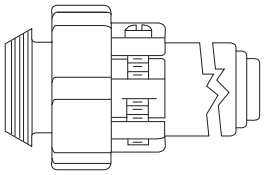

Telescoping bushing with M85049/41 cable clamp

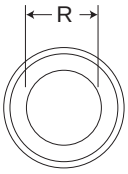

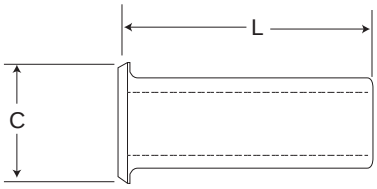

Telescoping gland bushing (used with M85049/41 cable clamp) keep dirt, oil and moisture out of endbell. Taping or wrapping wires is eliminated since bushing protects wires going through clamp. Combinations of bushings may be used to decrease cable entry diameter to improve sealing.

MS Part Number	Superceded MS Part Number	ITT Cannon Part Number	Fits Shell Size	C ±0.16 (0.41)	L ±0.31 (0.79)	R ±0.16 (0.41)
MS3420-3	MS39056-1	CA18220-3	8S-10S	.379 (9.63)	2.875 (73.02)	.130 (3.30)
MS3420-4	MS39056-2	CA18220-4	10SL, 12S, 12	.505 (12.83)	2.750 (69.85)	.200 (5.59)
MS3420-6	MS39056-3	CA18220-6	14S, 14	.619 (15.72)	2.625 (66.68)	.312 (7.92)
MS3420-8	MS39056-4	CA18220-8	16S, 16	.744 (18.90)	2.500 (63.50)	.437 (11.10)
MS3420-10	MS39056-5	CA18220-10	18	.869 (22.07)	2.375 (60.32)	.562 (14.27)
MS3420-12	MS39056-6	CA18220-12	20, 22	1.064 (27.03)	2.250 (57.15)	.625 (15.88)
MS3420-16	MS39056-7	CA18220-16	24, 28	1.314 (33.38)	2.125 (53.98)	.750 (19.05)
MS3420-20	MS39056-8	CA18220-20	32	1.596 (40.54)	2.000 (50.80)	.937 (23.80)
MS3420-24	MS39056-9	CA18220-24	36	1.847 (46.91)	1.875 (47.62)	1.250 (31.75)
MS3420-28	MS39056-10	CA18220-28	40	2.085 (52.96)	1.750 (44.45)	1.375 (34.92)
MS3420-32	MS39056-11	CA18220-32	44	2.335 (59.31)	1.625 (41.28)	1.624 (41.25)
MS3420-40	MS39056-12	CA18220-40	48	2.835 (72.01)	1.500 (38.10)	1.874 (47.60)

Dimensions shown in inches (mm)
Specifications and dimensions subject to change

Plastic Protective Caps

025-XXXX-000

Protective dust caps are designed to cover the coupling and conduit ends of MS connectors where there is a possibility of foreign matter accumulating on the interior of the connector or of damage to the threaded parts. Material is red polyethylene. Plastic dust caps can be reused, but are not intended to replace the standard aluminum dust caps shown in preceding pages.

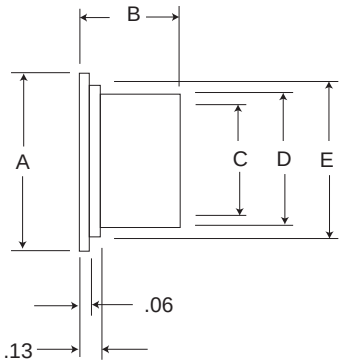

Part Number	MS3100F,R Coupling End	MS3100F,R Solder Pot End	MS3102F,R Coupling End	MS3102F,R Solder Pot End	MS-F (only) Solder Pot End	MS3106/MS3108 F,R Coupling End	MS3106/MS3108 F,R Solder Pot End	Dimensions A Max.	B Max.	C Max.	D Max.	E Max.	Wt. Lb.
025-0458-000				8S	8S	.469 (11.91)		.673	.440	.430	.486	.583	.0012
025-0459-000	8S	8S, 10S	8S	8S, 10S				.734	.440	.490	.546	.644	.0014
025-0460-000	10S, 10SL	10SL, 12S, 12	10S, 10SL	10SL, 12S, 12				.848	.700	.600	.656	.758	.0022
025-0462-000	12S, 12	14S, 14	12S, 12	14S, 14				.973	.700	.730	.786	.883	.0028
025-0463-000	14S, 14	16S, 16	14S, 14	16S, 16				1.098	.700	.850	.908	1.008	.0033
025-0466-000				18				1.209	.700	.950	1.016	1.119	.0042
025-0467-000				20				1.396	.700	1.150	1.216	1.308	.0054
025-0468-000	20		20	22				1.500	.700	1.240	1.306	1.405	.0060
025-0469-000	22		22	24				1.625	.700	1.360	1.426	1.530	.0067
025-0470-000				28				1.870	.700	1.610	1.676	1.775	.0087
025-0471-000				32				2.120	.700	1.860	1.926	2.025	.0103
025-0472-000				36				2.370	.700	2.110	2.176	2.275	.0141
025-0473-000				40				2.501	.700	2.310	2.380	2.491	.0164
025-0474-000				44				2.872	.700	2.590	2.660	2.772	.0186
025-0475-000				48				3.122	.700	2.840	2.910	30.22	.0222
025-0477-000						10S, 10SL		.802	.491	.550	.616	.712	.0017
025-0478-000						12S, 12		.911	.571	.669	.725	.821	.0022
025-0479-000						14S, 14		1.036	.571	.794	.850	.946	.0027
025-0480-000						16S, 16		1.161	.571	.919	.975	1.071	.0033
025-0484-000						18		1.290	.576	1.028	1.094	1.195	.0044
025-0486-000						22		1.540	.576	1.278	1.344	1.445	.0058
025-0487-000						24		1.665	.576	1.403	1.469	1.570	.0066
025-0488-000						28		1.907	.576	1.645	1.711	1.812	.0084
025-0489-000						32		2.157	.576	1.895	1.961	2.062	.0102
025-0490-000						36		2.412	.576	2.140	2.216	2.317	.0132
025-0491-000						40		2.672	.576	2.390	2.466	2.572	.0163
025-0492-000						44		2.922	.576	2.640	2.716	2.822	.0186
025-0493-000						48		3.172	.576	2.890	2.966	3.072	.0213
025-0498-000	16S, 16	18	16S, 16	48			18	1.240	.700	.990	1.056	1.150	.0044
025-0499-000		20, 22		36		22	20, 22	1.427	.700	1.117	1.183	1.337	.0055
025-0500-000		24, 24		40			24, 28	1.677	.700	1.420	1.486	1.587	.0072
025-0501-000	28	32	28	44			32	1.985	.700	1.730	1.796	1.895	.0095
025-0502-000	32	36	32	32			36	2.245	.700	1.980	2.046	2.155	.0114
025-0503-000	36	40	36	24, 28			40	2.495	.700	2.230	2.296	2.400	.0134
025-0504-000	40	44	40	20, 22			44	2.742	.700	2.480	2.546	2.652	.0186
025-0505-000	48		48	18			48	3.257	.700	2.980	3.046	3.157	.0233
025-0507-000	18		18		20			1.365	.700	1.110	1.176	1.275	.0050
025-0510-000	24		24					1.740	.700	1.490	1.556	1.650	.0077
025-0511-000	44	48	44					3.007	.700	2.730	2.796	2.907	.0220
025-0608-000					8S			.643	.440	.400	.456	.553	.0011
025-0609-000					10SL, 12S, 12			.829	.700	.580	.636	.739	.0021
025-0610-000					14S, 14			.954	.700	.710	.766	.864	.0028
025-0611-000					16S, 16			1.079	.700	.830	.886	.989	.0032
025-0612-000					28			1.839	.700	1.570	1.626	1.744	.0088
025-0613-000					32			2.089	.700	1.820	1.876	1.994	.0100
025-0614-000					36			2.376	.700	2.010	2.066	2.231	.0132

F80 Assembly Instructions

ITT Cannon provides a complete line of crimp insertion and extraction tooling to be used with CA-F80 contacts as follows.

Contact Size	Hand Crimp Tool*	Locator	Power Crimp Tool*	Crimp Head	Locator	Gauge
16	M-2252/1-01	TH-70-1	CBT-530			
12	M-2252/1-01	TP567	CBT-600/600B	CCH-12-7	CCHP-12-2	-
8	-	-	CBT-600/600B	CCH-8-1	CCHP-8-1	CCH-8-1
4	-	-	CBT-600/600B	CCH-4-1	CCHP-4-1	CCH-4-1
0	-	-	CBT-600B	CCH-0-1	CCHP-0-9	CCH-0

*The M-22520/1-01 is the MIL standard crimp tool for #12 thru #20 contacts and when used with crimp #12, 16 and 20 contacts for the CA-F80.
**The CBT-600 is recommended for crimping of #4 thru #12 contacts. The CBT-600B for #0 thru #8. The appropriate locators and crimp heads are available as shown above.

CBT-600

CBT-520/530

Crimp Tool

Crimping Contacts

1. Check the crimp tool to be sure that the proper crimp head locator is used.
2. Cycle to tool to be sure the indentors are open.
3. Place the contact, mating end first, into the tool.
4. Insert the stripped wire into the hollow end of the contact. Be sure the wire is inserted as far as it will go.
5. Close the tool completely to crimp. Unless the tool is closed completely, the tool will not release the contact.
6. Remove the crimped contact from the tool. Check the inspection hole to verify that the wire is fully inserted.

Insertion/Extraction Tools

Insertion and extraction tools used for these connectors are available for contact sizes 16 thru 0 as shown.

Contact Size	Insertion Tools	Extraction Tools	Handle Color
16	CIT-16 (038895-0000)	CET-16-4 (038888-0004)	Blue
12	CIT-12 (038896-0000)	CET-12-2 (038890-0002)	Yellow
8	CIT-8	CET-8	Red
4	CIT-4	CET-4	Blue
0	CIT-0	CET-0	Yellow

Insertion of Contacts

1. Before inserting the contacts, remove the endbell, grommets, and ferrule from the receptacle. Remove the endbell, grommet, ferrule, and coupling nut from the plug. Slide the hardware over the wire bundle in the proper order for reassembly after all the contacts are inserted.
2. To assist insertion of contacts, lubricate insert cavities with isopropyl alcohol. Alcohol will evaporate and will not leave a conductive film. Caution: Never use any lubricant other than isopropyl alcohol. Hold the plug or receptacle body firmly and insert the wired contacts as far as possible by hand. Starting at one side of the insulator, work progressively from contact to contact across the layout. When inserting socket contacts, be sure to provide fixture space below the front face to permit length of guide pins for #16 and #12 contacts to clear insulator face.
3. Place the correct insertion tool on the contact so that the wire runs along the groove in the tool. (Tool tip will butt against the shoulder.)
4. Beginning with a cavity on the outer edge of the plug, apply a slow, even pressure perpendicular to the insulator face until the contact snaps into position. If contacts are not inserted all the way prior to removing insertion tool, do not try to reinsert the insertion tool. Instead, using the extraction tool, push the contact back to the position it was in when the insertion tool was originally placed over the contact for push-in; otherwise the inside of contact cavity may be damaged by reinserting the insertion tool.
5. Inspect the front end of the insulator to assure that the contacts are inserted to the proper depth.

Completion

After all the cavities have been filled, slide the hardware back into position on the barrel. Tighten the endbell until the ferrule and endbell are flush. Compression of the grommet in this manner results in maximum sealing characteristics of the plug.

Extraction of Contacts

1. Select the appropriate tool. (Tool tips are reversible for either pin or socket.) Place the extraction tool over the pin or into the socket.
2. Apply a slow, even pressure to push the contact out of the rear of the insulator.

Recommended Wire Stripping

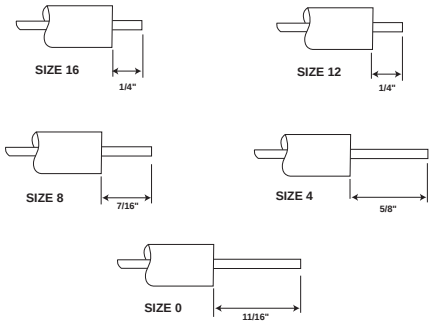

Contacts

	Contact Part Numbers F80	
Contact Size	Pin	Socket
16S	330-0345-016	031-0554-161
16	330-0351-016	031-0560-161
12	330-0351-012	031-0560-121
8	330-0351-008	031-0560-081
4	330-0351-004	031-0560-041
0	330-0351-000	031-0560-001

Guide Pins

Guide pins are used to assist insertion of socket contact Sizes #16 and #12. Larger sizes do not require guide pins.

Contact	Guide Pin
#16	226-1017-000
#12	226-1018-000

Wire Hole Fillers

Wire Size AWG	ITT Cannon Part Number	Color
20	225-1000-000	Red
16/16S	225-0017-000	Blue
12	225-0018-000	Yellow
8	225-0019-000	White
4	225-8502-000	Green
0	225-8503-000	Black

Dimensions shown in inches (mm)
Specifications and dimensions subject to change