阅读申明

1.本站收集的数据手册和产品资料都来自互联网，版权归原作者所有。如读者和版权方有任何异议请及时告之，我们将妥善解决。
2.本站提供的中文数据手册是英文数据手册的中文翻译，其目的是协助用户阅读，该译文无法自动跟随原稿更新，同时也可能存在翻译上的不当。建议读者以英文原稿为参考以便获得更精准的信息。
3.本站提供的产品资料，来自厂商的技术支持或者使用者的心得体会等，其内容可能存在描叙上的差异，建议读者做出适当判断。
4.如需与我们联系，请发邮件到marketing@iczoom.com，主题请标有“数据手册”字样。

Read Statement

1. The datasheets and other product information on the site are all from network reference or other public materials, and the copyright belongs to the original author and original published source. If readers and copyright owners have any objections, please contact us and we will deal with it in a timely manner.

2. The Chinese datasheets provided on the website is a Chinese translation of the English datasheets. Its purpose is for reader’s learning exchange only and do not involve commercial purposes. The translation cannot be automatically updated with the original manuscript, and there may also be improper translations. Readers are advised to use the English manuscript as a reference for more accurate information.

3. All product information provided on the website refer to solutions from manufacturers’ technical support or users the contents may have differences in description, and readers are advised to take the original article as the standard.

4. If you have any questions, please contact us at marketing@iczoom.com and mark the subject with “Datasheets”.

Downloaded from www.iczoom.com

SOURIAU

UTL Series

48Hrs SAMPLE SERVICE

Dynamic IP68/69K • UV Resistant • UL/IEC Compliant

Esterline
Connection Technologies

UTL Series

Contents

Overview

Interact safety standards 06
UTL range overview 07
General technical characteristics 10

Mechanics

Specifications 14
Harnesses 14
Dimensions 15
Accessories & tooling 16
Contacts 17

Contacts

Description 20
Contact plating selector guide 21
Contact selector guide 22
Packaging 22
Crimp contacts 23
#16 coaxial contacts 24

Technical information

Tooling 28
Crimptooling table 29
Extraction tools 29
Dimensions overmoulded harnesses 30
Handle & Interchangeable Heads 31
Assembly instruction 32
Cable assembly 38
Rated current & working voltage 41
UV resistance 41
UL94 & UL1977 42
IEC 61984 with IP code explanation 45
What is NEMA rating ? 47

Appendices

#16 coaxial contacts - cabling notices 50
Glossary of terms 57
Part number Index 58

© 2012 – SOURIAU

UTL Series

UTL Series

Overview

- Presentation 06
- UTL range overview 07
- General technical characteristics 10

UTL Series
Overview

In today fast paced environment we are all buying electronic devices with confidence. To achieve a high such level of trust, the legislator had to put in place a wide variety of safety standards
Being conscious of the number of standards and the difficulty to find an appropriate connector, Souriau decided to release an all-in-one solution. The UTL series is a unique connector which is compliant with ALL industry standards you can see nowadays.
In addition to this it has been designed to be exclusively overmolded o prevent unwanted tamper. Souriau having the ability to supply cable assemblies it is therefore a gain of time with a one stop shopping supplier. There is no need anymore to look for a cable house able to terminate this fantastic product.

Interact safety standards

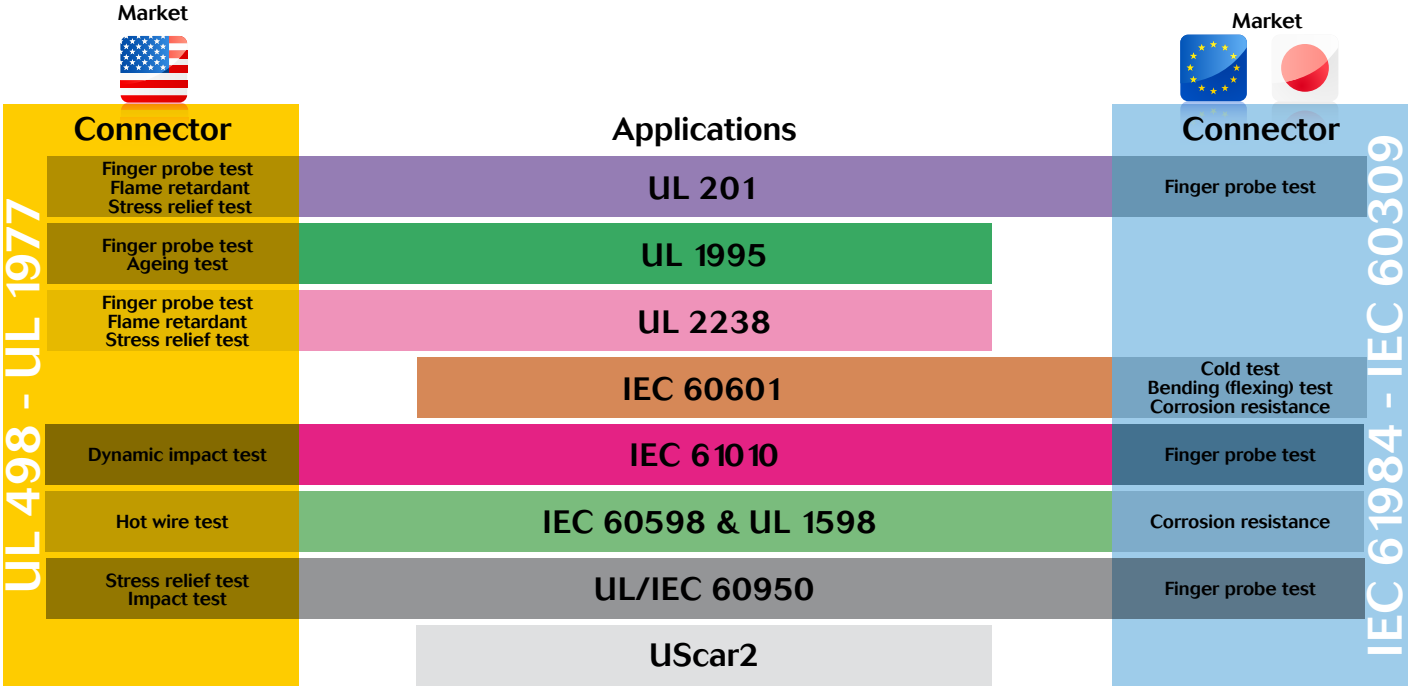

- UL 498: Attachment plugs and receptacles
- UL 201: Garage equipment
- UL 1995: Heating and cooling equipment
- IEC 60601: Medical equipment
- UL 1977: Component connectors for use in data, signal, control and power applications
- UL 2238: Cable assemblies and fittings for industrial control and signal distribution
- IEC 61984: Connectors
- IEC 61010: Safety requirements for electrical equipment for measurement, control, and laboratory use
- IEC 60598: Street lights
- IEC 60309: Plugs, socket-outlets and couplers for industrial purposes
- UL/IEC 60950: Information technology equipment
- UScar2: Performance specification for automotive electrical connector systems

© 2012 – SOURIAU

UTL range overview

The UTL Series is a plastic connector range designed to respect modern safety standards.

The stainless steel latch coupling system makes it simple to use. With only 1 finger, connectors are mated with an audible and sensitive "click".
The key shape of the coupling system makes it blind mateable. In dark conditions the color and mechanical discriminations helps you to do it and avoid you to damage connectors.

The philosophy of the UTL Series is built around three key elements:

Dynamic IP68/69K

The UTL Series is rated at IP68/69K… even in dynamic conditions. This means that it remain sealed even when used continuously underwater or cleaned using a high pressure hose and cable is moving.

If this same level of performance is required even when connectors then we have special sealed contacts. This unique fetaure helps you to product your electronics from ingress of water. This is particulary insteresting when using with NEMA enclosure or outdoor luminaires.

UV Resistant

In most applications, our connectors are exposed to extreme climatic conditions; it was therefore key for us to select the materials best able to cope with the targeted environment.

In most applications, our connectors are exposed to extreme climatic conditions; it was therefore key for us to select the materials best able to cope with the targeted environment.

The UTL Series uses an outdoor rated material. Underwriters Laboratories classifies it "F1" per UL746C.

UL/IEC Compliant

The outmost priority for any electrical installation is to protect personnel from any shock hazard.

In North America, Underwriters Laboratories insisted that connector manufacturers, depending of the application, respect their standards. The UTL Series had thus been qualified, certified by this organisation and compliant with the UL 1598, UL1977, UL498, UL60320.

In Europe and in Asia, IEC standards are better known and trusted by end users. Like its American equivalent, the IEC refers to safety rules. The UTL Series was obviously designed to respect these rules and especially the IEC 60598, IEC60065, IEC60320, IEC61076-2-103.

© 2012 – SOURIAU

UTL Series

UTL Series
Crimp contact

Sealed: IP68/69K
UV resistant
UL/IEC compliant

Plugs

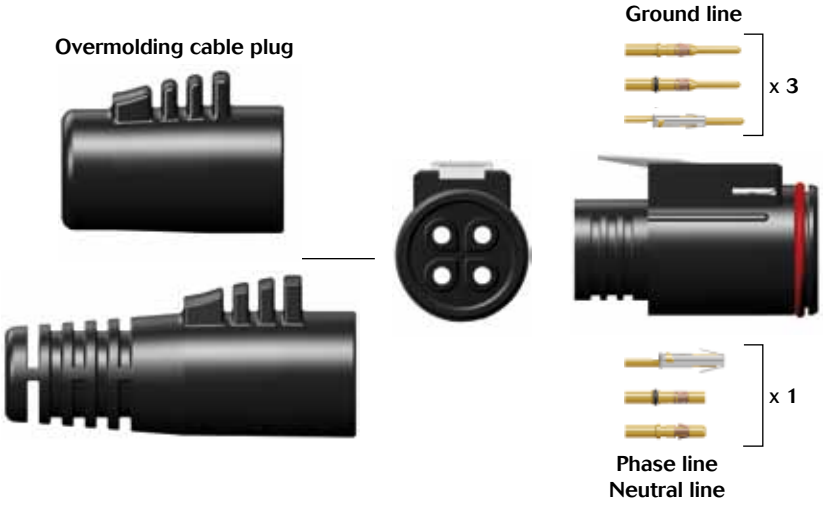

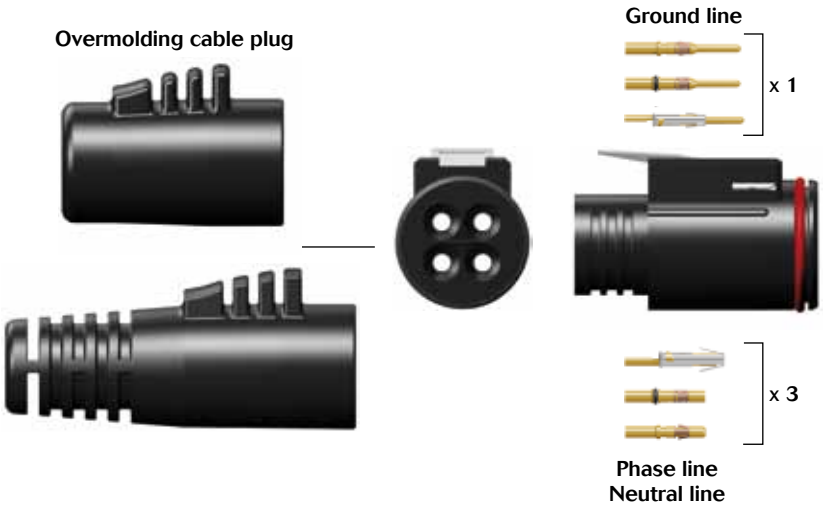

© 2012 – SOURIAU

range overview

Receptacles

Phase line
Neutral line

x 3

Ground line

x 1

Overmolding inline receptacle

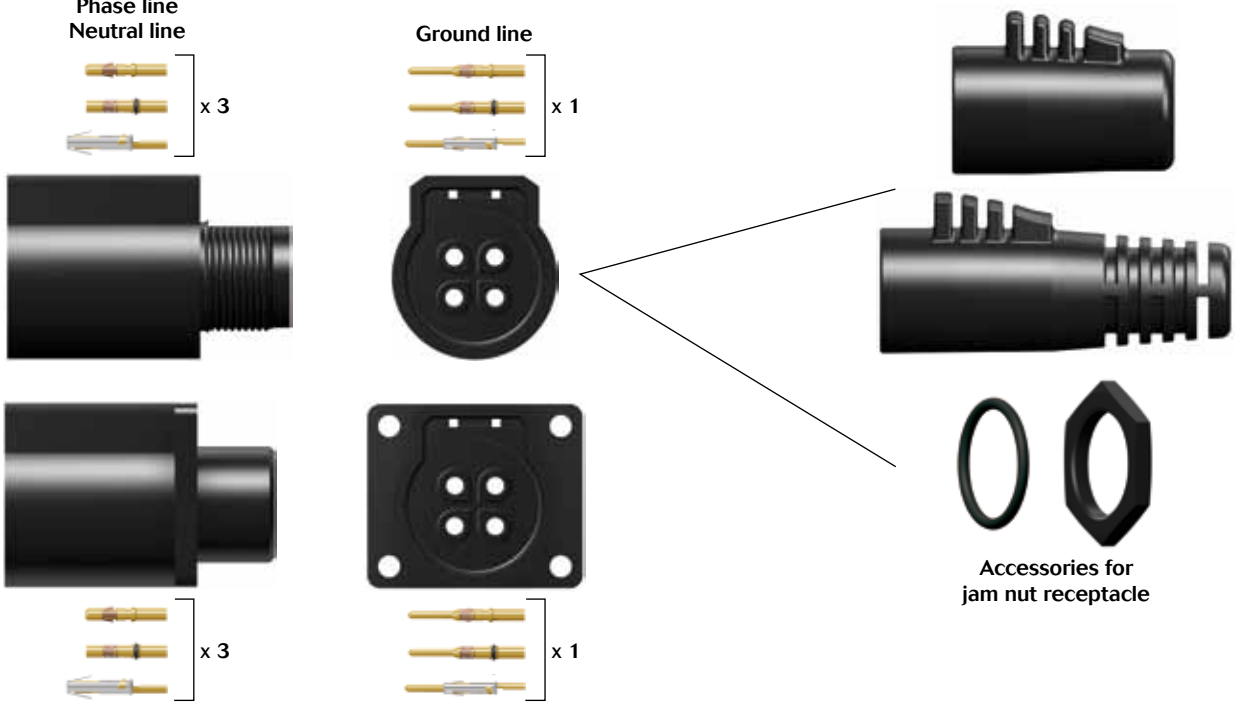

Accessories for
jam nut receptacle

Phase line
Neutral line

x 1

Ground line

x 3

Overmolding inline receptacle

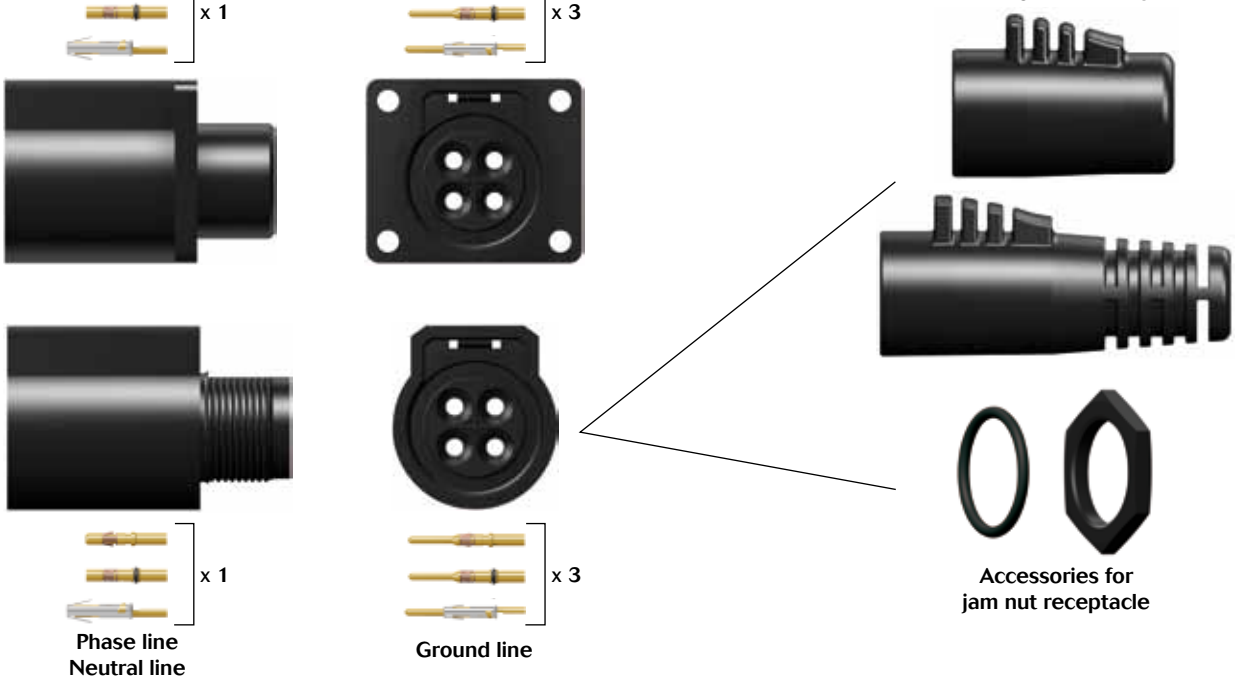

Accessories for
jam nut receptacle

© 2012 – SOURIAU

General technical

Mechanical

1 • Durability:
500 matings & unmatings (with stamped and formed contact, S18 plating)

Environmental

3 • Operating temperature:
from -40°C to +105°C

• Flammability rating:
UL 94 5VA

• Salt spray:
≥1000 hours

• UV resistant:
No mechanical degradation or important variation of colour of exposure in natural environment
(F1material per the UL 746C)

4 • Sealing:
- IP68/69K mated with standard contacts
- IP68/69K even unmated with sealed contacts (see p23)

• Fluid resistance:
- Gasoil
- Mineral oil
- Acid bath
- Basic bath

© 2012 – SOURIAU

characteristics

Electrical

- UL: 600V 16A
  277V 13A for CBC use
- CN: 600V 13A
  277V 10A for CBC use
- IEC: 230/400V 16A
- 2 Connector for Breaking circuit
- First Mate Last Break contact mating on earth line

Material

- Body connector + Backshell: Thermoplastic
- Insert: Connector: Thermoplastic
- Contacts: See page 22
- Nut: Metal
- Halogen free
- RoHS compliant & conform to the Chinese standard SJ/T1166-2006 (Chinese RoHS equivalent)

Qualification

- In accordance with:
  - IEC60065, IEC60598, UL1598, IEC60320, UL498, UL94 , UL746 , IEC61076-2-103
  - UL 1977: UL file number E169916
  - IEC 61984: Pending

© 2012 – SOURIAU

UTL Series

UTL Series

Mechanics

103G1

Specifications 14

Dimensions 15

Accessories & tooling 16

Contacts 17

UTL Series
103G1

Specifications

Contact type	Connector type	Part number			
		Male insert		Female insert	
		Black color	Grey color	Black color	grey color
Crimp contacts supply separately see page 17	Square flange receptacle	UTL0103G1P	UTL0103G1P03	UTL0103G1S	UTL0103G1S03
	Plug	UTL6103G1P	UTL6103G1P03	UTL6103G1S	UTL6103G1S03
	Jam nut receptacle	UTL7103G1P	UTL7103G1P03	UTL7103G1S	UTL7103G1S03
	In line receptacle	UTL1103G1P	UTL1103G1P03	UTL1103G1S	UTL1103G1S03

48h sample service

Harnesses

Connector type	Overmolded harnesses, straight ending					
	Male insert			Female insert		
	3 ft	6 ft	12 ft	3 ft	6 ft	12 ft
Plug 1 side	UTLMKT63G1P3FT	UTLMKT63G1P6FT	UTLMKT63G1P12FT	UTLMKT63G1S3FT	UTLMKT63G1S6FT	UTLMKT63G1S12FT
Plug 2 sides	-	-	-	UTLMKT63G1SP3FT	UTLMKT63G1SP6FT	UTLMKT63G1SP12FT
Plug + in line	-	-	-	UTLMKT613G1SP3FT	UTLMKT613G1SP6FT	UTLMKT613G1SP12FT

Electrical characteristics

UL
600V 16A
277V 10A for CBC use

CN
600V 13A
277V 10A for CBC use

IEC
16A 230/400V 16A

UTL103G1 derating curves

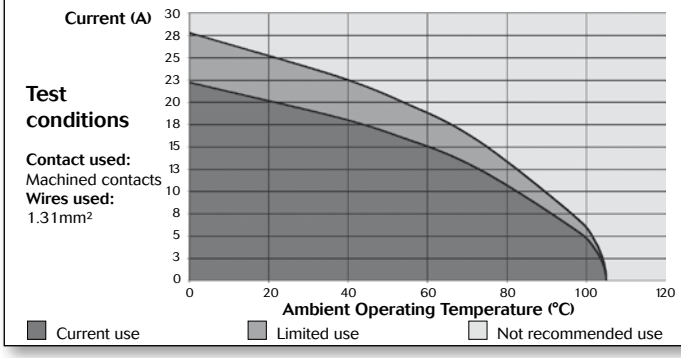

© 2012 – SOURIAU

3 + ground
16A/600V
per UL1977

Dimensions

Square flange receptacle - UTL0

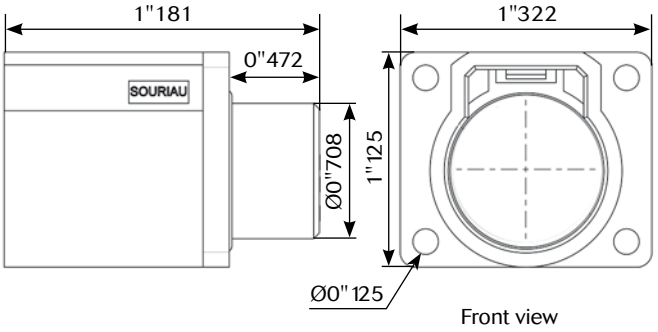

In line receptacle - UTL1

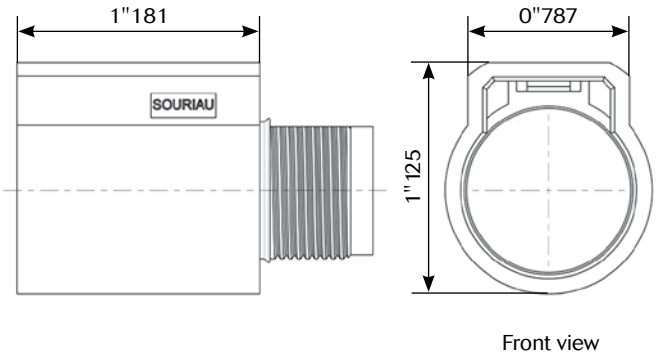

Plug - UTL6

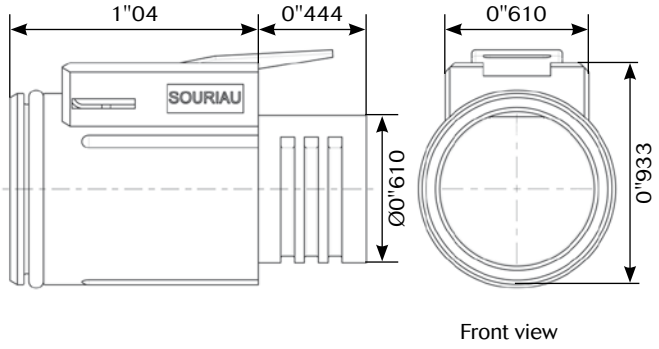

Jam nut receptacle - UTL7

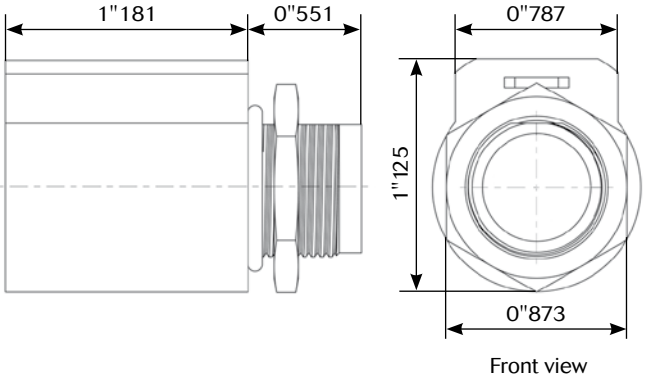

Panel cut out

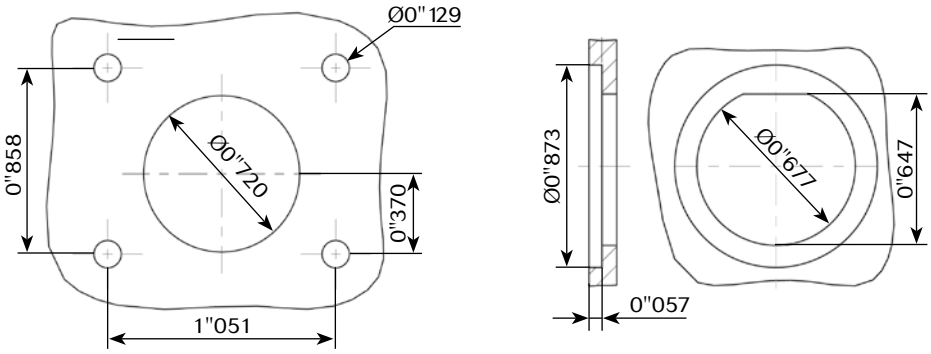

Note:
all dimensions are in inch

© 2012 – SOURIAU

Accessories

Dustcap for plug

Part number
UTL610DCG

Dustcap for receptacle

Part number
UTL10DCG

48h sample service

Dustcap for male plug UTL0/1/6

Part number
UTL103G1PDCG68

Dustcap for female plug UTL0/1/6

Part number
UTL103G1SDCG68

Grommet

Part number
SWSFILLERPLUG

Tooling

Handle

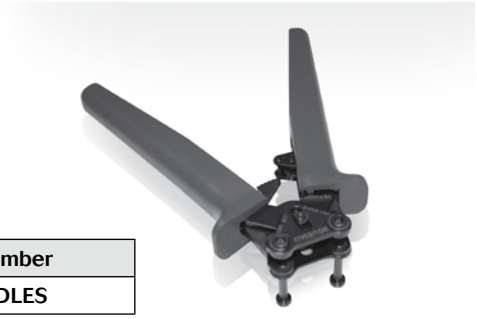

Part number
SHANDLES

Crimp tooling

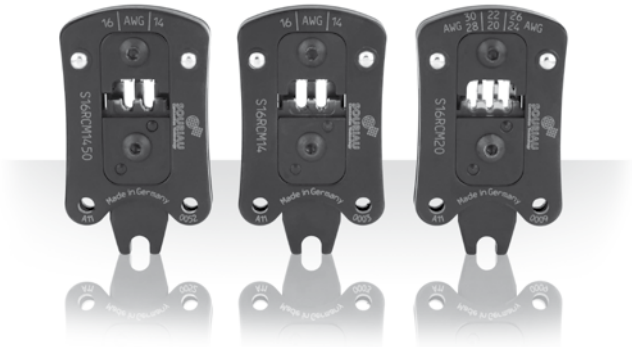

Contacts	Contact size	Part number of head
RM/RC 28M1K(1)	Standard contacts #16 Ø 1.6mm	S16RCM20
RM/RC 24M9K(1)		S16RCM20
RM/RC 20M13K(1)		S16RCM20
RM/RC 20M12K(1)		S16RCM20
RM/RC 16M23K(1)		S16RCM16
RM/RC 14M30K(1)		S16RCM14
RM/RC 16M25K		S16RCM1625
RM/RC 14M25K		S16RCM1425
SM/SC 24ML1TK6(1)		S16SCM20
SM/SC 20ML1TK6(1)		S16SCM20
SM/SC 16ML1TK6(1)		S16SCML1
SM/SC 14ML1TK6(1)		S16SCML1
SM/SC 16ML11TK6(1)		S16SCML11
RMDXK10D28K	Coaxial contacts	M10S-1J
RCDXK1D28K		M10S-1J
RM/RC DX60xxD28K		M10S-1J
RM/RC DXK10D28 + york090		M10S-1J
RM/RC DX60xxD28		M10S-1J

(1): example of plating, for other plating see page 21

© 2012 – SOURIAU

3 + ground
16A/600V
per UL1977

Contacts

#16	Contact type	AWG	Part number		Max wire Ø	Max insulator Ø
			Male	Female		
Crimp	Machined	30-28	RM28M1K(1)	RC28M1K(1)	0.55	1.1
		26-24	RM24M9K(1)	RC24M9K(1)	0.8	1.6
		22-20	RM20M13K(1)	RC20M13K(1)	1.18	1.8
		22-20	RM20M12K(1)	RC20M12K(1)	1.18	2.2
		20-16	RM16M23K(1)	RC16M23K(1)	1.8	3.2
		16-14	RM14M30K(1)	RC14M30K(1)	2.28	3.2
	Machined with o-ring	20-16	RM16M25K(3)	RC16M25K(3)	1.8	3.2
		16-14	RM14M25K(3)	RC14M25K(3)	2.28	3.2
	Stamped & formed reeled contacts	26-24	SM24M1TK6(1)(2)	SC24M1TK6(1)(2)	0.89-1.28	-
		22-20	SM20M1TK6(1)(2)	SC20M1TK6(1)(2)	1.17-2.08	-
		18-16	SM16M1TK6(1)(2)	SC16M1TK6(1)(2)	3.0	-
		18-16	SM16M11TK6(1)(2)	SC16M11TK6(1)(2)	2.0-3.0	-
		14	SM14M1TK6(1)(2)	SC14M1TK6(1)(2)	3.2	-
Coaxial	Cable Multipiece	-	RMDXK10D28	RCDXK1D28	-	-
	Cable Monocrimp	-	RMDX60xxD28	RCDX60xxD28	-	-
	Twisted pair Multipiece	-	RMDXK10D28 + york090	RCDXK1D28 + york090	-	-
	Twisted pair Monocrimp	-	RMDX60xxD28	RCDX60xxD28	-	-

(1): Example of plating, for other plating see page 21
(2): Loose piece contact available if putting L. Example: SM20ML1TK6
(3): Sealed contacts

48h sample service

Prototype kit - See instructions page 36

Connector type	Wire section	Boot	Part number	
			Male insert	Female insert
Plug	AWG 20	1	UTL6103G1P20AWG	UTL6103G1S20AWG
	AWG16	1	UTL6103G1P16AWG	UTL6103G1S16AWG
	AWG14	1	UTL6103G1P14AWG	UTL6103G1S14AWG
Inline receptacle	AWG 20	1	UTL1103G1P20AWG	UTL1103G1S20AWG
	AWG16	1	UTL1103G1P16AWG	UTL1103G1S16AWG
	AWG14	1	UTL1103G1P14AWG	UTL1103G1S14AWG
Jam nut receptacle	AWG 20	1	UTL7103G1P20AWG	UTL7103G1S20AWG
	AWG16	1	UTL7103G1P16AWG	UTL7103G1S16AWG
	AWG14	1	UTL7103G1P14AWG	UTL7103G1S14AWG
Square flange receptacle	AWG 20		UTL0103G1P20AWG	UTL0103G1S20AWG
	AWG16		UTL0103G1P16AWG	UTL0103G1S16AWG
	AWG14		UTL0103G1P14AWG	UTL0103G1S14AWG

NB: Contacts supplied (S31 plating)

Note: all dimensions are in inch

© 2012 – SOURIAU

UTL Series

Contacts

Description 20

Contact plating selector guide 21

Contact selector guide 22

Packaging 22

Crimp contacts 23

#16 coaxial contacts 24

© 2012 – SOURIAU

Contacts

Description

The UTL series is delivered without contact (crimp version). Contacts are not loaded, this series offers the unique possibility to use the same contact in any layout as long as it receives the same active part size. Thus it is possible to buy only one contact reference and equip all connectors even if housings are different.

The main benefit is the standardisation which means reduction of inventory cost.

Bearing in mind that any additional tool or complicated assembly process should be avoided, our contacts are based on a snap-in principle which avoid the use of an insertion tool.

Crimp contacts are available in different versions:

• machined

• stamped & formed

• coaxial

In addition, UTL series can obviously be equipped with solder contacts, PCB contacts.

© 2012 – SOURIAU

Contact plating selector guide

As soon as you know what contact size you need, you next have to decide on which type to use.
Souriau proposes mainly two different types of electrical contacts:

- Machined
- Stamped & formed

Machined contacts are generally chosen for low quantities purpose as well as a better solution for power applications.
Stamped & formed contacts offer the ability to be crimped automatically which makes them more suitable for high volume production applications.

Then comes the question: What plating should I choose ?
Hereunder is a graph with criteria to guide you:
NB: do not mix different plating (e.g. tin plated pin contact with gold plated socket contact).

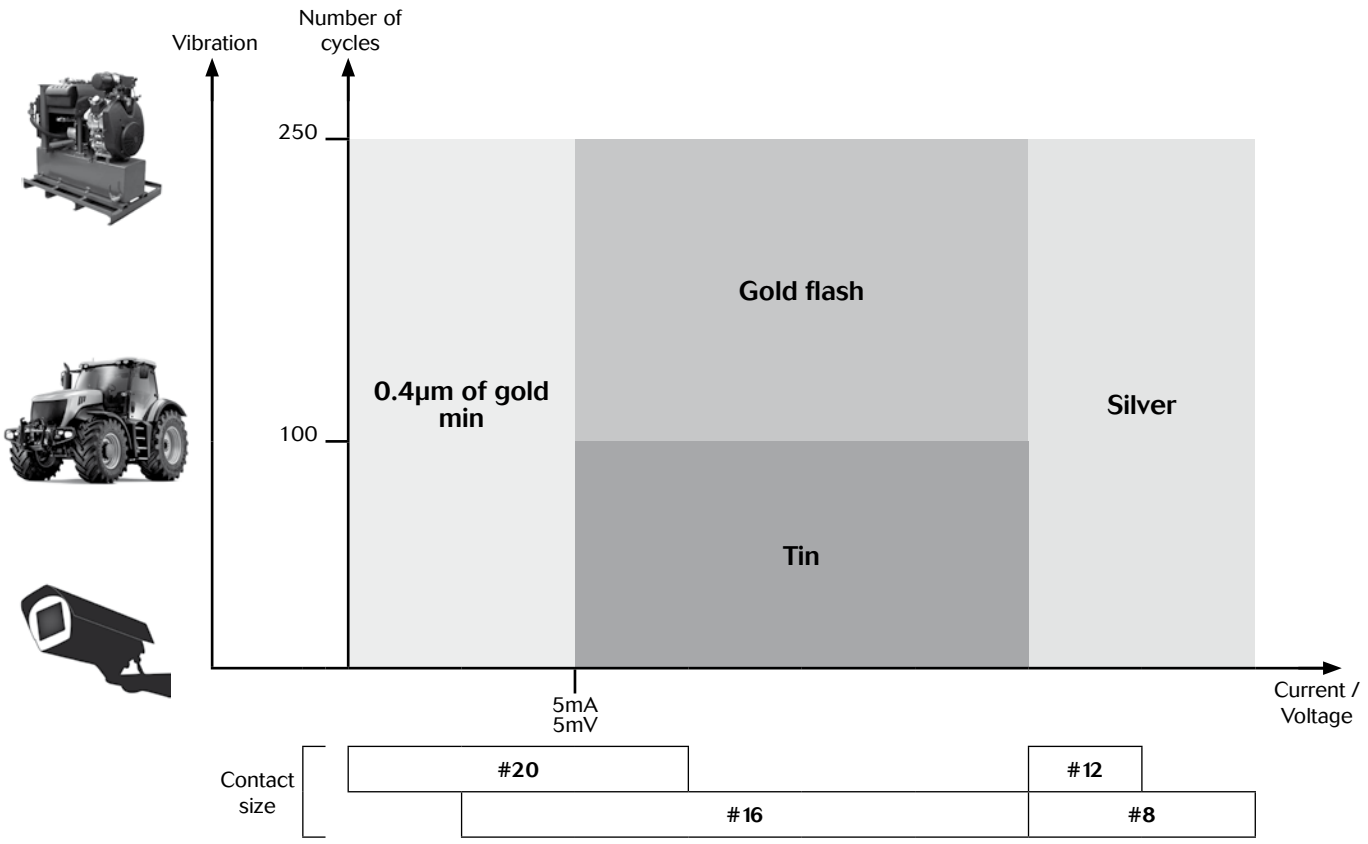

Contact selector guide

Contact supply separately

Electrical characteristics: contact resistance		
#16 Ø1.6mm	Machined	< 3mΩ
	Stamped & formed	< 6mΩ

Available platings (contact supply separately)	
K	Min 0.4µ gold over 2µ Ni
S31	Active part: Gold flash over Ni Crimp area: Nickel
S18	Active part: 0.75µ gold min over 2µ Ni Crimp area: 1.3µ tin over Ni Other: Nickel
TK6	2-5µ Sn pre-plated

Packaging

Conscious of the wide variety of applications, contact packaging has been considered for small series (bulk packaging) and high volume production (reeled contacts):

Size contact #16

- 25 pieces bulk packing (stamped & formed contacts)

- 50 pieces bulk packing (machined contacts)

- 1000 pieces bulk packing (machined contacts)

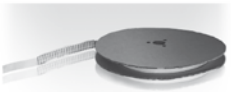

- 3000 pieces reeled (stamped & formed contacts)

- 5000 pieces reeled (machined contacts)

© 2012 – SOURIAU

Crimp contacts

Standard version

Contact size	Type	Wire size		Part number		Max wire Ø	Max insulator Ø	Plating available
		AWG	mm²	Male	Female			
#16 Ø1.6 mm	Machined	30-28	0.05-0.08	RM28M1-	RC28M1-	0.55	1.1	K
	Machined	26-24	0.13-0.2	RM24M9-	RC24M9-	0.8	1.6	K
	Stamped & Formed	26-24	0.13-0.25	SM24M1-(1) SM24ML1-(2)	SC24M1-(1) SC24ML1-(2)	0.89-1.28	Insulation grip	S31, S18, TK6
	Machined	22-20	0.32-0.52	RM20M13-	RC20M13-	1.18	1.8	K
				RM20M12-	RC20M12-		2.2	
	Stamped & Formed	22-20	0.35-0.5	SM20M1-(1) SM20ML1-(2)	SC20M1-(1) SC20ML1-(2)	1.17-2.08	Insulation grip	S31, S18, TK6
	Machined	20-16	0.52-1.5	RM16M23-	RC16M23-	1.8	3.2	K
	Machined with o-ring	20-16	0.52-1.5	RM16M25-	RC16M25-	1.8	3.2	K
	Stamped & Formed	18-16	0.8-1.5	SM16M1-(1) SM16ML1-(2)	SC16M1-(1) SC16ML1-(2)	3.0	No insulation grip	S31, S18, TK6
	Stamped & Formed	18-16	0.8-1.5	SM16M11-(1) SM16ML11-(2)	SC16M11-(1) SC16ML11-(2)	2.0-3.0	Insulation grip	S31, S18, TK6
	Machined	16-14	1.5-2.5	RM14M30-	RC14M30-	2.28	3.2	K
	Machined with o-ring	16-14	1.5-2.5	RM14M25-	RC14M25-	2.28	3.2	K
	Stamped & Formed	14	2.0-2.5	SM14M1-(1) SM14ML1-(2)	SC14M1-(1) SC14ML1-(2)	3.2	No insulation grip	S31, S18, TK6

(1) contact reeled (2) loose contact

Exemple: **RM16M23K** - Size #16, Machined, AWG20 wire, gold plating.

48h sample service

REMINDER
Plugs and receptacles have to be equiped with both contact genders.
EX: UTL6103G1P = 3 x SM16M1531 + 1 x SC16M1531

© 2012 – SOURIAU

#16 coaxial contacts

Coaxial contact range

We provide 2 types of coaxial contacts suitable for 50 or 75Ω, coaxial cable or twisted pair cable.

Monocrimp coaxial contact

• The monocrimp one-piece coaxial contacts offer high reliability plus the economic advantage of a 95% reduction in installation time over conventional assembly methods.

• This economy is achieved by simultaneously crimping both the inner conductor and outer braid or drain wire.

Multipiece crimp coaxial contact

• The inner conductor and outer braid is crimped individually.

• The thermoplastic insulating bushing in the outer body is designed to accept and permanently retain the inner contact.

• An outer ferrule is used to connect the braid to the outer contact and provide cable support to ensure against bending and vibration.

Suitable for Coaxial cable or Twisted cable

• For jacket diameter from 1.78 to 3.05mm
Inner conductor up to 2.44mm diameter

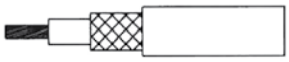

• For jacket diameter from 0.64 to 1.45mm
Inner conductor from AWG30 to AWG24

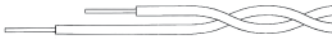

Contacts for coaxial cable summary

Contact type	Contact range		Contact part number with cable combination	Cabling notice
	Male contact	Female contact		
Multipiece	RMDXK10D28	RCDXK1D28	See page 50	See pages 54 & 55
Monocrimp	RMDX60xxD28	RCDX60xxD28		See page 56

48h sample service

Contacts for twisted pairs cable summary

Contact type	Contact range		Contact part number with cable combination	Cabling notice
	Male contact	Female contact		
Multipiece	RMDXK10D28 + YORK090	RCDXK1D28 + YORK090	See page 51	See page 52
Monocrimp	RMDX60xxD28	RCDX60xxD28		See page 53

© 2012 – SOURIAU

© 2012 – SOURIAU

uTL Series

UTL Series

Technical information

Tooling 28

Crimptooling table 29

Extraction tools 29

Dimensions overmoulded harnesses 30

Handle & interchangeable heads 31

Assembly intruction 32

Cable assembly 38

Rated current & working voltage 41

UV resistance 41

UL94 + UL1977 42

IEC 61984 & IP codes explained 45

What is NEMA rating ? 47

© 2012 – SOURIAU

Tooling

Automatic crimping tools

Mecal is leader in manufacturing tooling for crimping terminals over a stripped wire.
Established in 1976, Mecal has become one of the world's leading companies dedicated to the design and manufacture of semi automatic production tools for strip fed, open barrel crimp terminals, serving the Automotive, Telecom and Datacomm industry.

The extreme environment interconnect specialist "from deep sea to deep space".
Souriau designs manufactures and markets high performance interconnect solutions for severe environments dedicated to the aerospace, defence, light and heavy industry markets.

Souriau has been working in partnership with Mecal for a good number of years. With sales offices located in all major industrial regions of the world, the combined strengths of both organisations has resulted in a truly global solution to all your production tooling needs.

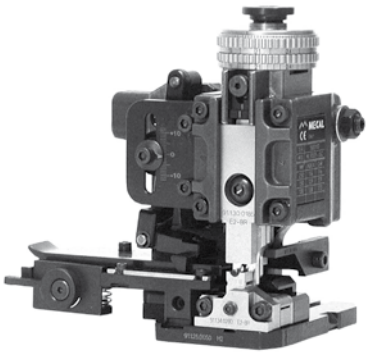

Mini Applicator

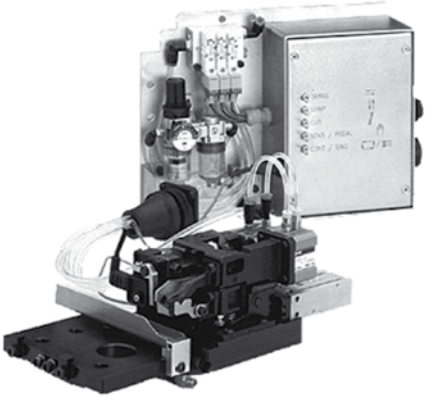

Stripper

Presses

Mecal sales network:

www.mecal.net/eng/retevendita.php

© 2012 – SOURIAU

Crimptooling table

Standard contacts

Contact size	Part number	Head	Handles	Extraction tools
#16 0"062	RM/RC 28M1-	S16RCM20	SHANDLES	RX2025GE1
	RM/RC 24M9-			
	RM/RC 20M13-			
	RM/RC 20M12-			
	RM/RC 16M23-	S16RCM16		
	RM/RC 14M30-	S16RCM14		
	SM/SC 24M1- SM/SC 24ML1-	S16SCM20		
	SM/SC 20M1- SM/SC 20ML1-			
	SM/SC 16M1- SM/SC 16ML1-	S16SCML1		
	SM/SC 14M1- SM/SC 14ML1-			
	SM/SC 16M11- SM/SC 16ML11-	S16SCML11		

Note: endurance of SHANDLES tool = 5 000 cycles.

Specific contacts sealed

Contact size	Part number	Head	Handles	Extraction tools
#16 0"062	RM/RC 16M25-	S16RCM1625	SHANDLES	RX2025GE1
	RM/RC 14M25-	S16RCM1425		

Coaxial contacts

See cabling notice chapter Appendices, pages 52 to 56.

Extraction tools

Contact size	Extractor
#16	RX2025GE1

RX2025GE1

Extraction tools instruction

Extraction:

Place the tool into the cavity from front face of the connector, push on the handle, then remove the contact.

Dimensions mated connector

Long version: with strain relief

UTL0 + UTL6

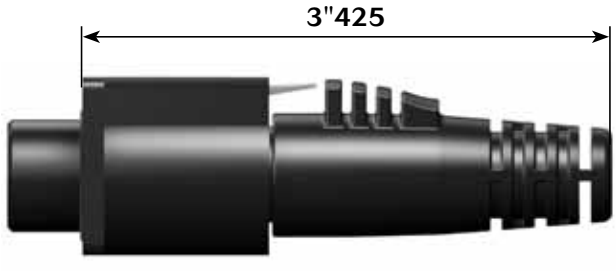

UTL7 + UTL6

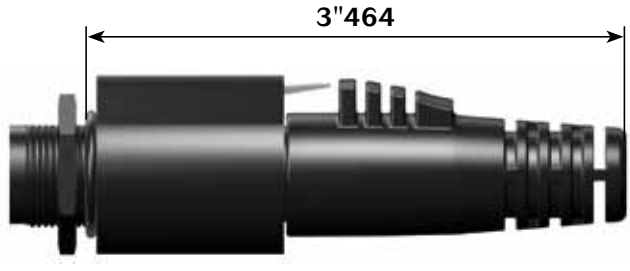

UTL1 + UTL6

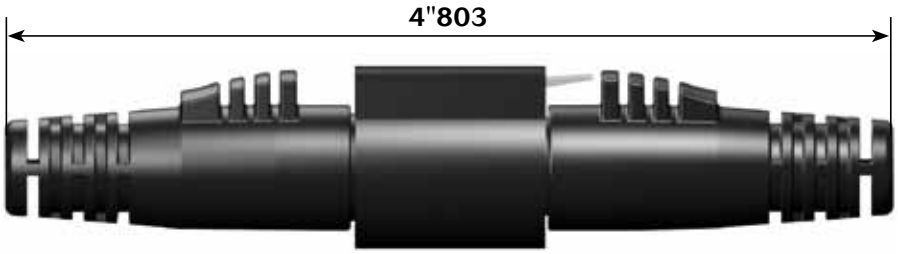

Short version: without strain relief

UTL0 + UTL6

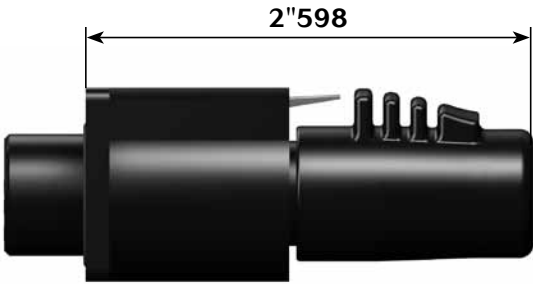

UTL7 + UTL6

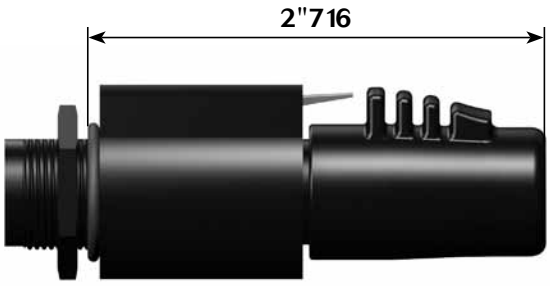

UTL1 + UTL6

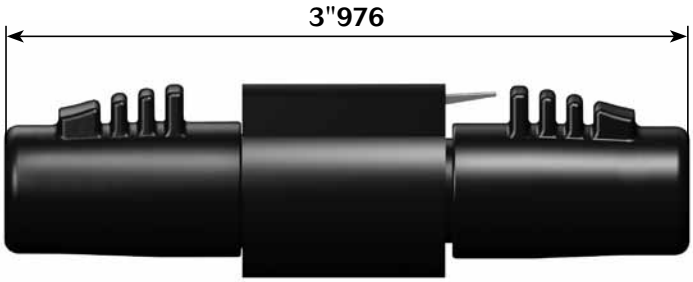

Note: all dimensions are in inch

© 2012 – SOURIAU

Handle & Interchangeable Heads

User guide

1) Fully close then release the tool, keep it open.
Open the 2 pins.

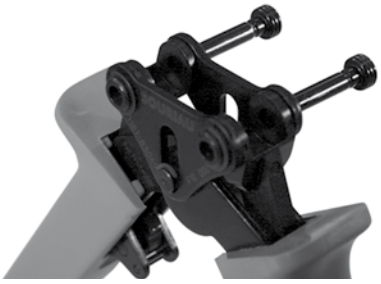

2) Choose the adapted head (sold separately), keep vertically and slide it into the handle till the mecanical end.

3) Close simultaneously the two pins to maintain the head.

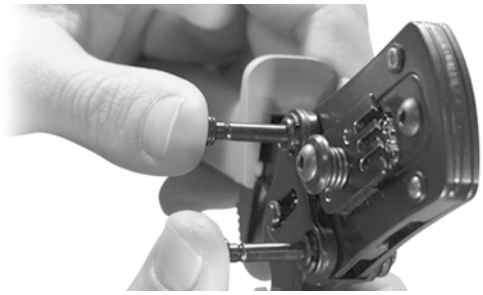

4) Strip the cable properly checking the size recommended in the catalog.

5) Place conductors, with no deteriorations, in the bucket contact. All strands to be located in the crimp bucket.

6) Position the contact in the bottom of the tools by checking out its orientation.

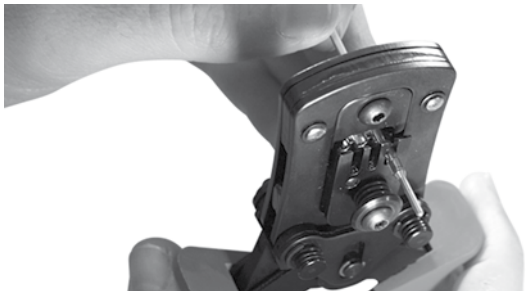

7) To crimp contact assembly-cable, tighten sharply the clip to the end of the mechanism.

8) To control crimp quality, slighty pull cable with two fingers to control retention.

© 2012 – SOURIAU

Assembly instruction

Wire stripping crimp version

	Part number		Stripping length L (inch)
	Male	Female	
Machined contact	#16		
	RM28M1- / RM24M9- RM20M13- / RM20M12-	RC28M1- / RC24M9- RC20M13- / RC20M12-	0"188
	RM16M23- / RM14M30-	RC16M23- / RC14M30-	0"279
	RM16M25K / RM14M25K	RC16M25K / RC14M25K	0"216 / 0"208
Stamped & formed	#16		
Without insulation support	SM24M1- / SM24ML1- SM20M1- / SM20ML1	SC24M1- / SC24ML1- SC20M1- / SC20ML1-	0"157
	SM16M11- / SM16ML11-	SC16M11- / SC16ML11-	0"183
With insulation support	SM16M1- / SM16ML1-	SC16M1- / SC16ML1-	0"249
	SM14M1- / SM14ML1-	SC16M11- / SC16ML11-	0"249

Note: all dimensions are in inch

© 2012 – SOURIAU

Crimping

One of the key factors which affects the performance of a connector, is the way contacts are terminated. Crimped connections are nowadays seen as the best solution to ensure quality throughout the lifetime of the product. Here are some reasons why we recommend this method of termination for UTS connectors:

Advantages (Extract from the IEC 60352-2):
- Efficient processing of connections at each production level
- Processing by fully-automatic or semi- automatic crimping machines, or with hand operated tools
- No cold-soldered joints
- No degradation of the spring characteristic of female contacts by the soldering temperature
- No health risk from heavy metal and flux steam
- Preservation of conductor flexibility behind the crimped connection
- No burnt, discolored and overheated wire insulation
- Good connections with reproducible electrical and mechanical performances
- Easy production control.

To ensure that the crimp tooling is performing according tooriginal specifications, it is important to carry out regular checks. A common way to check the performance of tooling is with a simple pull test, ideally using a dedicated electric pull tester. Minimum recommended full forces are indicated in the tables below:

Machined contact

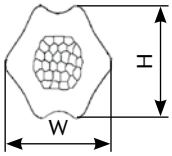

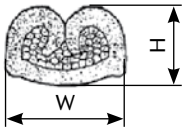

Stamped & Formed contact

Active contact part	Contact type	Die location on heads	Wire section range	Section (mm²)	Tensile straight test (mini)	Height (Mm) H (±0.075)	Width (Mm) W (±0.075)	Head's P/N
Machined contacts size 16	RM/RC 28M1K*	30/28	AWG 30	0.05 min	11 N	1.14	1.41	S16RCM20
			AWG 28	0.08 max	11 N			
	RM/RC 24M9K*	26/24	AWG 26	0.12 min	15 N	1.15	1.41	
			AWG 24	0.25 max	32 N			
	RM/RC 20M13K*	22/20	AWG 22	0.32 min	40 N	1.26	1.76	
			AWG 20	0.50 max	60 N			
	RM/RC 20M12K*		AWG 22	0.32 min	40 N			
			AWG 20	0.50 max	60 N			
	RM/RC 16M23K*	20	AWG 20	0.50 max	60 N	1.66	2.18	S16RCM16
		18	AWG 18	0.82 max	90 N	1.80	2.28	
		16	AWG 16	1.50 max	150 N	1.96	2.43	
	RM/RC 14M25K	16	AWG 16	1.50 min	150 N	2.10	2.68	S16RCM1425
		14	AWG 14	2.50 min	230 N	2.30	2.78	
	RM/RC 16M25K	18	AWG 18	0.82 max	90 N	1.80	2.28	S16RCM1625
		16	AWG 16	1.50 max	150 N	1.96	2.43	
	RM/RC 14M30K*	16	AWG 16	1.50 min	150 N	2.10	2.68	S16RCM14
		14	AWG 14	2.50 min	230 N	2.30	2.78	
S & F contacts size 16	SM/SC 24ML1TK6*	26/24	AWG 26	0.12 min	15 N	0.84	1.50	S16SCM20
			AWG 24	0.25 max	32 N			
	SM/SC 20ML1TK6*	22/20	AWG 22	0.32 min	40 N	1.02	1.54	
			AWG 20	0.50 max	60 N			
	SM/SC 16ML11TK6*	18	AWG 18	0.82 min	90 N	1.32	2.09	S16SCML11
		16	AWG 16	1.50 max	150 N	1.36	2.10	
	SM/SC 16ML1TK6*	18	AWG 18	0.82 min	90 N	1.49	2.02	S16SCML1
		16	AWG 16	1.50 max	150 N	1.7	2.05	
	SM/SC14ML1TK6*	14	AWG 14	2.50 max	230 N	1.79	2.58	

(1): example of plating, for other plating see page 21

Note: all dimensions are in mmm

Assembly instruction

UTL stripping dimensions

- 1 - Female insulator: Strip external cable sheath, adjust ground cable length
- 2 - Male insulator: Strip external cable sheath, adjust signal cable lengths
- 3 - Crimp contacts
- 4 - Place the lubrificant on the contact orings
- 5 - Place all the contacts inside the corresponding cavities in the same time
- 6 - Manually push each contact, or use specific tools, until audible click.
  Check each contact rétention, with a traction with two fingers

Plug: UTL0103G1P - UTL6103G1P - UTL7103G1P - UTL1103G1P

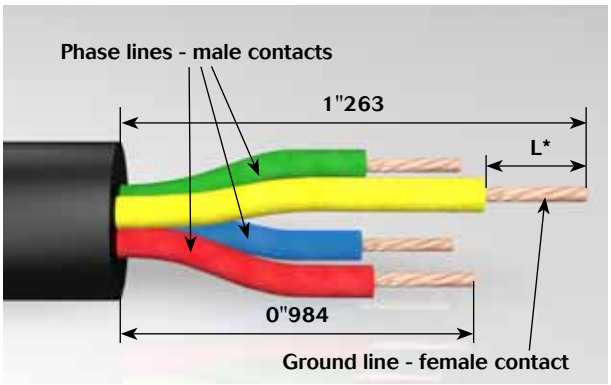

Receptacle: UTL0103G1P - UTL6103G1S - UTL7103G1S - UTL1103G1S

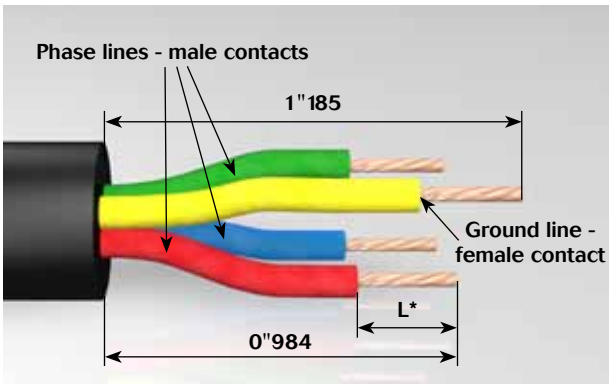

* see page 32

Ground contact must be different compared to the others

Note: all dimensions are in inch

UTL 0 assembly (mounting suggestion)

- Strip wires, crimp contacts
- Insert contacts into connector cavities (insert manually or use tool RTM205 crimp contacts)
- Place receptacle in the panel cut-out (see dimension page 15)
- Secure receptacle with M3 screws (not supplied), torque 0.7 N.m maxi

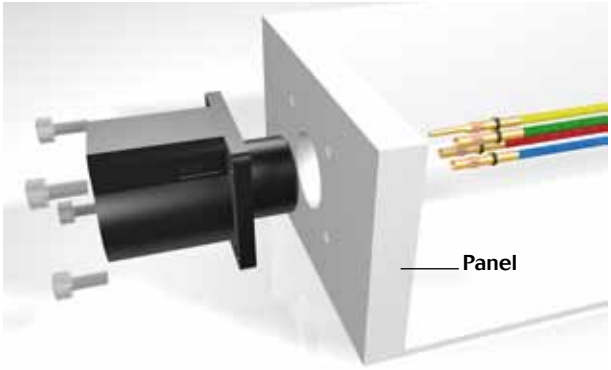

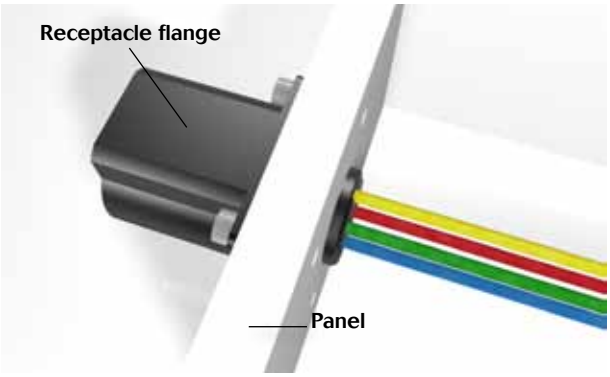

© 2012 – SOURIAU

UTL 7 assembly (mounting suggestion)

- Strip wires, crimp contacts
- Insert contacts into connector cavities (insert manually or use tool RTM205 crimp contacts)
- Seat o-ring, place receptacle in the panel cut-out (see dimension page 15)
- Tighten jam nut
- Jam nut torque: 2.5 Nm maxi, tool tightening: 7/8"

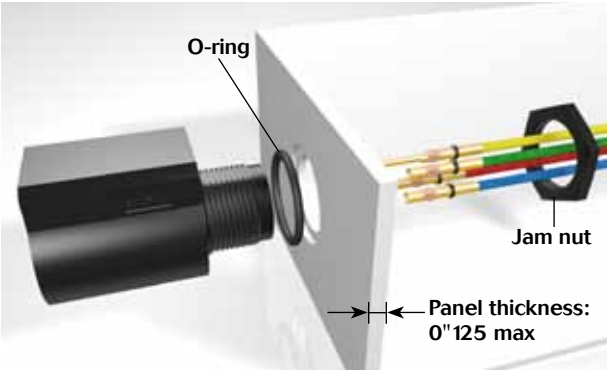

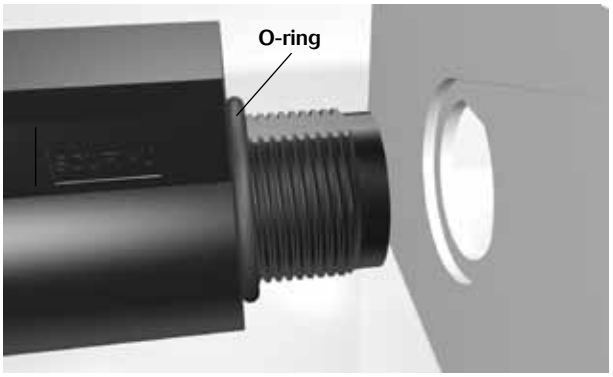

Note: all dimensions are in inch

UTL 6 assembly

- Slide nut on the cable
- Strip external cable jacket
- Strip wires, crimp contacts
- Insert contacts into connector cavities (insert manually or use tool RTM205 crimp contacts)
- Place nut

© 2012 – SOURIAU

Assembly instruction

Prototype kit

The boot is semi-flexible and heat-shrinkable with a moldable adhesive inner lining.

- 1 - Place the heat shrink boot over the cable
- 2 - Strip the cable jacket (see page 34)
- 3 - Strip the individual wires (see page 32)
- 4 - Crimp the contacts
- 5 - Place the contacts in their cavities, checking the retention by slightly pulling the cable.
- 6 - Clean the connector surface and the cable jacket with isopropyl alcohol
- 7 - Position the boot over the rear threads
- 8 - Heat the boot with a heat gun: minimum shrink temp: 80°C - minimum full recovery temp: 110°C make sure to apply the heat evenly around the boot. Starting by applying the heat from the rear of the connector.
  Do not apply excessive heat, as it will damage the connector and/or boot.
- 9 - Let the boot cool down
- 10 -Check for good retention and the boot glue grip.
- 11 - It is advised to rub the jacket with sand paper and clean the jacket before shrinking the boot.

4

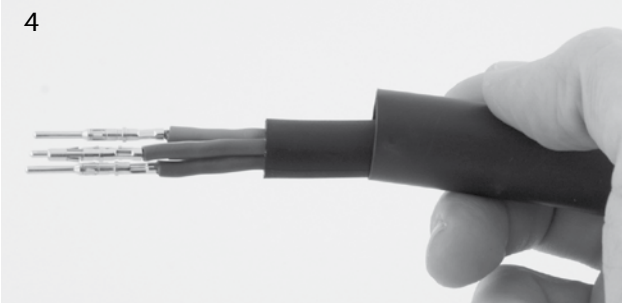

8

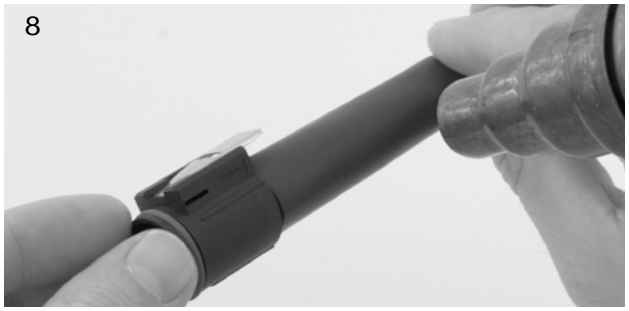

5

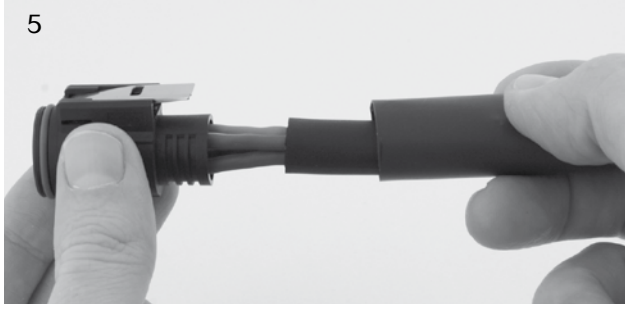

9

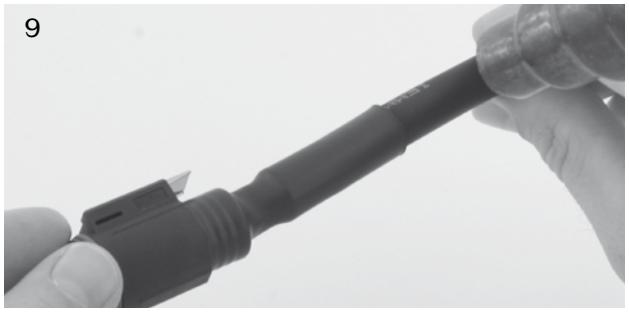

7

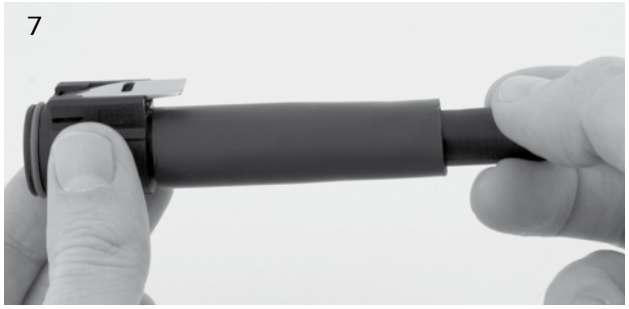

10

© 2012 – SOURIAU

SWS mounting

Push the sealing plug into each connector cavity to seal until a mechanical stop.

UTL0

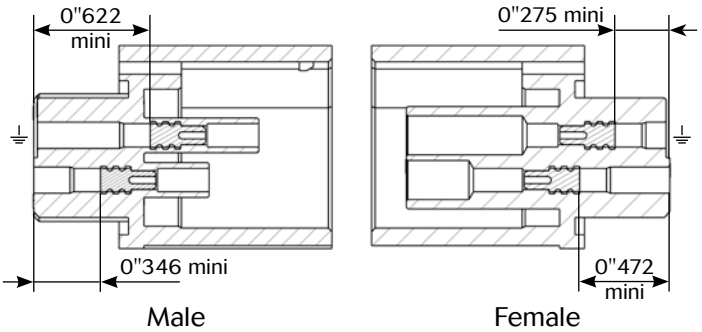

UTL7

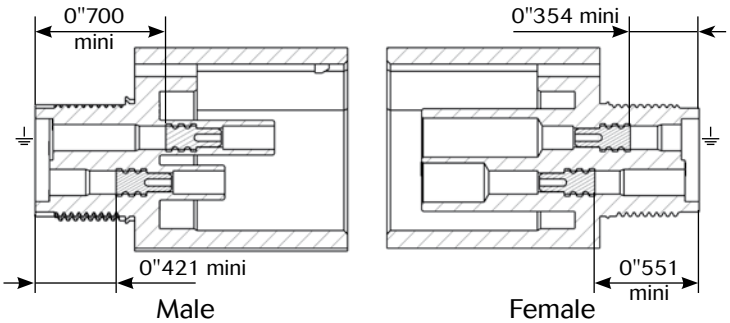

UTL6

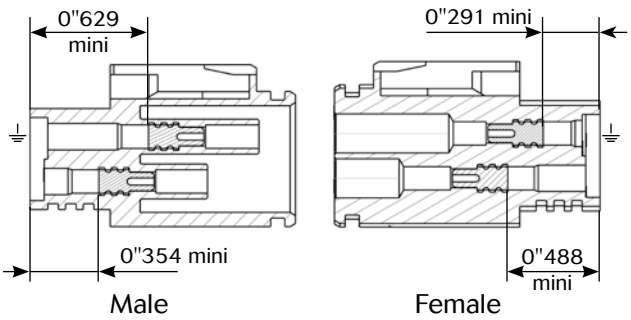

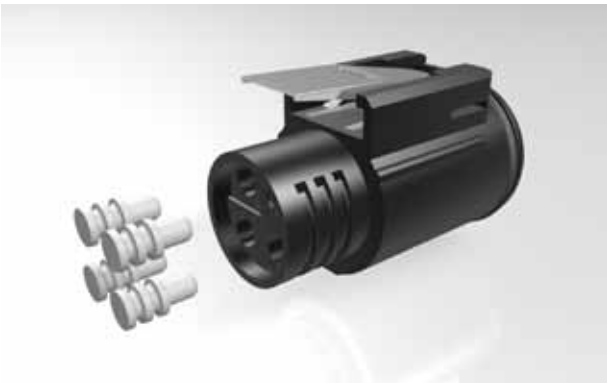

Note: all dimensions are in inch

© 2012 – SOURIAU

Cable assembly

Souriau provides connectors in various applications for more than 90 years in the most extreme environment. Being conscious about the difficulty to find a quick and a reliable harness manufacturer, we decided years ago to start in house cable assembly production. It allows customers to reduce the number of suppliers, and to take advantage of the "best in class" quality of the Souriau group. Overmoulding is a process that further enhances the sealing properties of the UTL range, especially over many years of use. Overmoulding provides the opportunity to change the cable exit from straight through 90 degrees and avoid any stress on the cable terminated to the connector. Also, as the wires are encapsulated inside the moulding, a barrier is created which prevents from any liquid from entering the equipment through the connector if the cable jacket is breached.

How to choose the outer jacket material

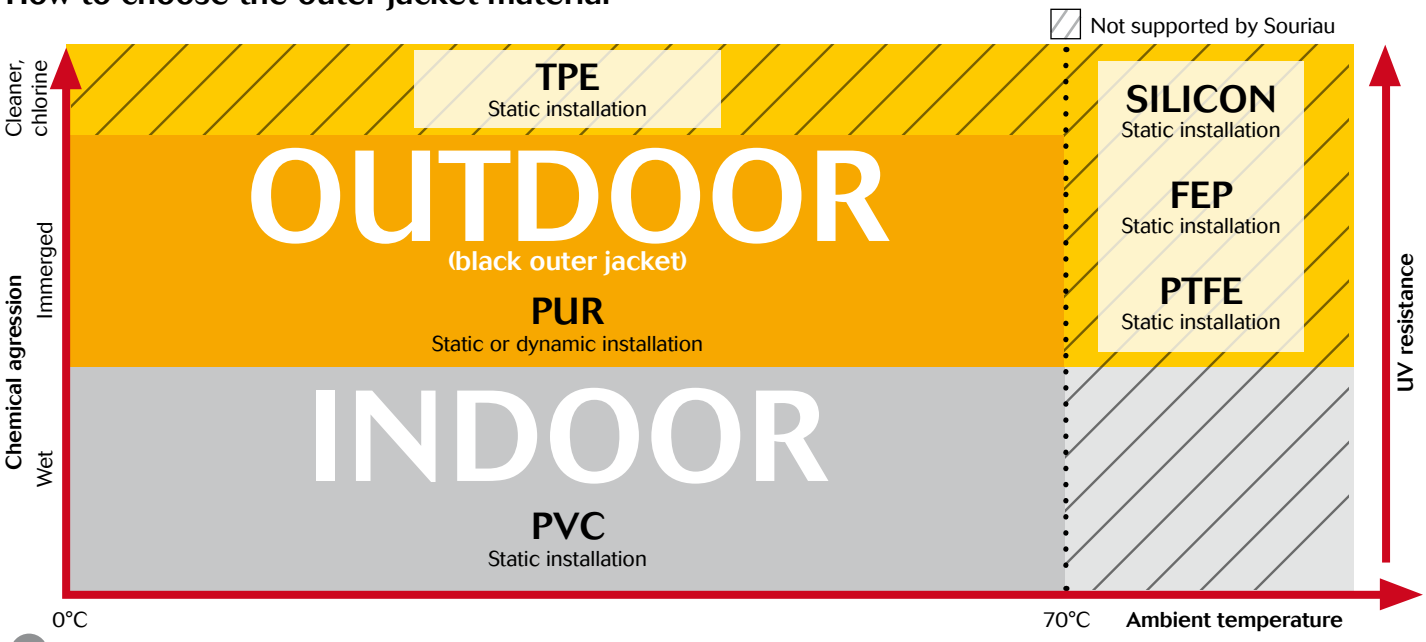

© 2012 – SOURIAU

Overmolding description

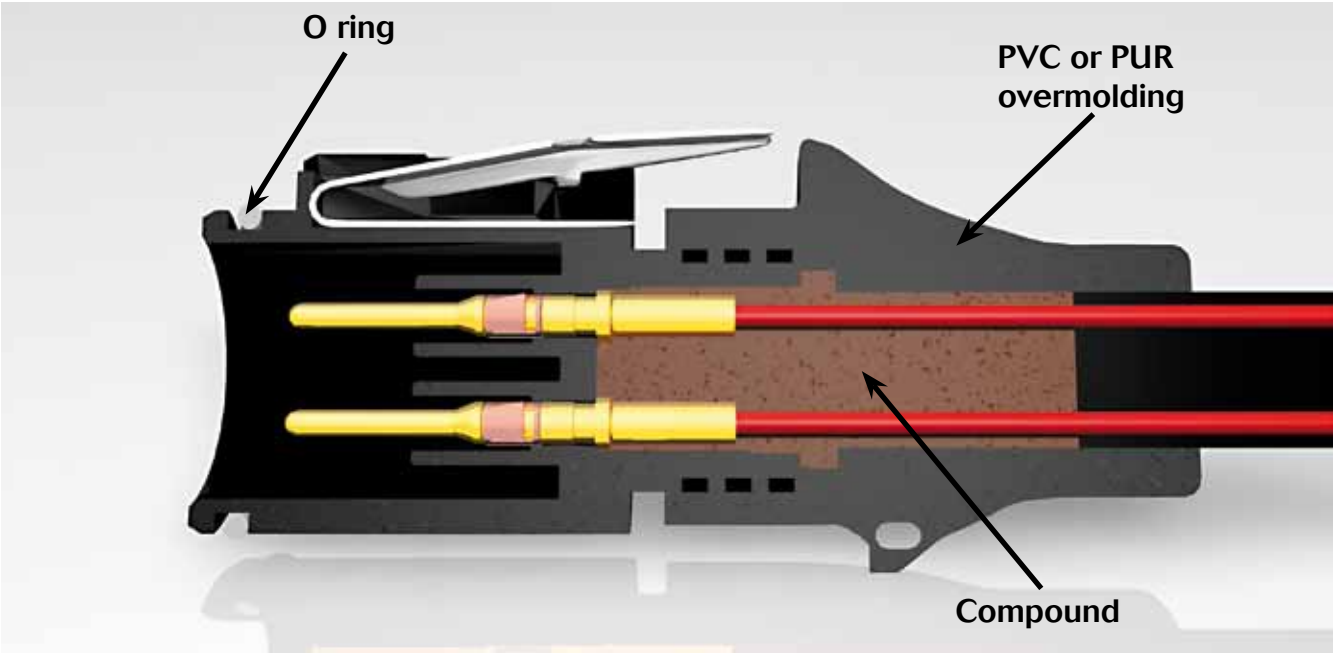

Discrete connector

Overmoulded connector

© 2012 – SOURIAU

Cable information

Construction
- Polyurethane Jacket (Black)
- 16 AWG conductors
- Multi- conductor 4, 8, or 12
- 300V or 600V
- Shielded or Unshielded
- Flammability rating UL 1581 Sec.1080 (VW-1)

Applications
- Machining Centers (Oil Resistant)
- Assembly Automation Equipment
- Geophysical Equipment
- Solar (UV Stable)
- Outdoor Displays

Standardization of American cable

Nomenclature Key

S: Service Grade (also means extra hard service when not followed by J, V, or P)
J: Hard Service
V: Vacuum cleaner cord (also light duty cable)
P: Parallel cord (also known as zip cord) – Always light duty
E: Thermoplastic Elastomer (UL/NEC designation ONLY)
O: Oil Resistant*
T: Thermoplastic
W: Outdoor-includes sunlight resistant jacket and wet location rated conductors (formerly "W-A")
H: Heater cable
VW-1: Flame retardant
FT2: Flame retardant

Definitions of Cable Types

SVT: Thermoplastic insulated vacuum cleaner cord, with or without 3rd conductor for grounding purposes; 300V. (PVC)
SJT: Junior hard service, thermoplastic insulated conductors and jacket. 300V. (PVC)
SJTW: Same as SJT except outdoor rated. (PVC)
SJTO: Same as SJT but oil resistant outer jacket. (PVC)
SJTOW: Same as SJTO except outdoor rated. (PVC)
ST: Hard service cord with all thermoplastic construction, 600V. (PVC)
STW: Same as ST except outdoor rated. (PVC)
STO: Same as ST but with oil resistant outer jacket. (PVC)
STOW: Same as STO except outdoor rated. (PVC)

© 2012 – SOURIAU

Rated current & working voltage

Current carrying capacity

The current carrying capacity of a connector is limited by the thermal properties of materials used in it's construction. The amount of current that can be handled depends on the size of cable used, the ambient temperature and the heat that is generated inside the connector. Part 3 of the IEC 60512 standard determines through a derating curve, the maximum current permissible, which varies from one layout to another (Fig.1 & Fig.2). Wire size plays an important role as well, since they help to dissipate heat and avoid overheating (Fig.1 & Fig.3).

Please note that the curve should be adjusted when dealing with potential hot spots, which can occur as a result of unequal loading of current across a number of contacts. As a general rule, it is best to avoid locating power handling contacts in the middle of the connector; try to locate them towards the edge where heat can be dissipated more effectively. Eventually you should find a level which represents the permissible operating range:

Fig.1: UTL – 1.5mm² wires

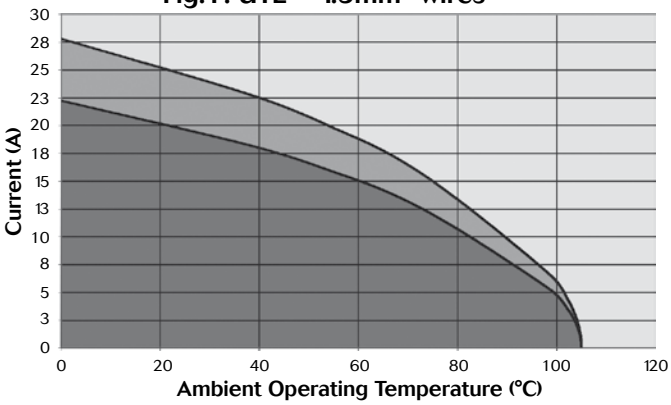

Fig.2: UTL – 2.5mm² wires

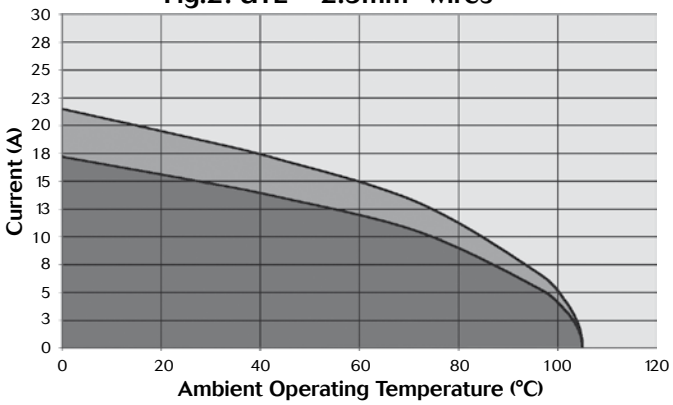

Current use **Limited use** **Not recommended use**

The **rated current** is defined as uninterrupted continuous current that a connector can take when all contacts are energized simultaneously without exceeding the maximum limit of temperature. The earth contact is never loaded.

UV resistance

Solar radiation affects all materials, but plastics can be susceptible to extreme degradation over time.
The choice of materials for the UTL series was therefore a critical consideration.

All over the world we are not exposed to the same amount of energy given by the sun. The chart shown here clearly illustrates this.

So Souriau has chosen a polymeric material able to withstand sunlight over a long period of time. For that we carefully followed the UL 746C and finally picked up a "f1" material. As a consequence our connector has been approved for outdoor use.

Yearly mean of daily irradiation in UV (280-400 nm) on horizontal plane (J/cm²) (1990-2004)

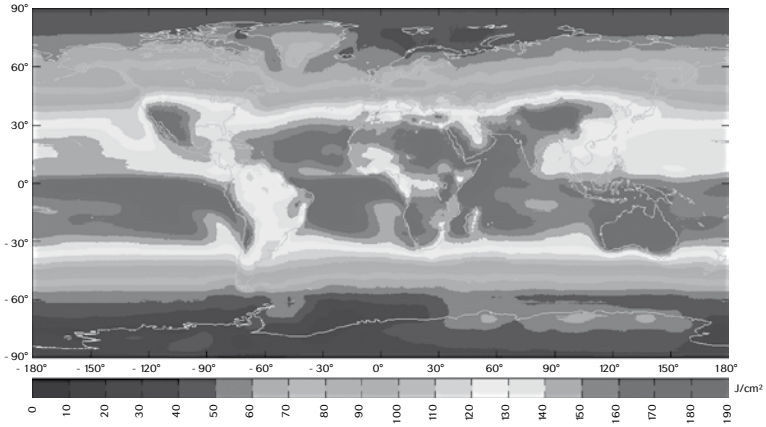

© 2012 – SOURIAU

Underwriter Laboratories

There are two main standards for industrial connectors: UL94 & UL1977

UL 94: Tests for Flammability of Plastic Materials for Parts in Devices and Appliances

This standard is dedicated to plastics flammability. It characterises how the material burns in various orientation and thicknesses. Whereas most of our competitor are using a 50W test to classified the ability of their solution to withstand fire, Souriau decided to increase this to a 500W test. New regulations tend to emphasize the importance of burning behavior making the 50W test less and less relevant.

The UTL series has been rated at 5VA.

Procedure: Bar specimens are to be 4"921 long by 0"511 wide, and provided in the minimum thickness.
Plaque specimens are to be 5"905 by 5"905 and provided in the minimum thickness.
Thicker specimens may also be provided and shall be tested if the results obtained on the minimum thickness indicate inconsistent test results. The maximum thickness is not to exceed 0"511.

Conditions	94-5VA
Afterflame time plus afterglow time after fifth flame application for each individual bar specimen	≤60s
Cotton indicator ignited by flaming particles or drops from any bar specimen	No
Burn-through (hole) of any plaque specimen	No

5VA Vertical burning:

- The specimen is clamped from the upper 0"236 of the specimen, with the longitudinal axis vertical, so that the lower end of the specimen is 11"810 above a horizontal layer of not more than 0.08 g of absorbent cotton thinned to approximately 1"968 x 1"968 and a maximum thickness of 0"236.
- The 500W flame is then to be applied to one of the lower corners of the specimen so that the tip of the blue cone is within 0 to 0"118 of the specimen edge.
- Apply the flame for 5 ±0.5 seconds and then remove for 5 ±0.5 seconds. Repeat the operation until the specimen has been subjected to five applications of the test flame.

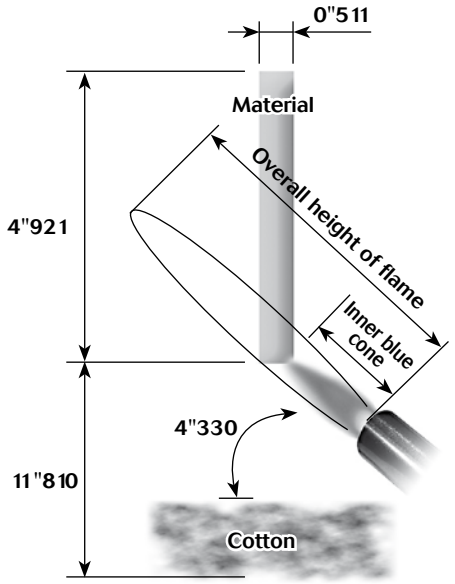

5VA Horizontal burning:

- Support the plaque specimen by a clamp in the horizontal plane.
- The flame is then to be applied to the centre of the bottom surface of the plaque so that the tip of the blue cone is within 0 to 0"118 of the plaque surface.
- Apply the flame for 5 ±0.5 seconds and then remove for 5 ±0.5 seconds. Repeat the operation until the plaque specimen has been subjected to five applications of the test flame.
- After the fifth application of the test flame, and after all flaming or glowing combustion has ceased, it is to be observed whether or not the flame penetrated (burned through) the plaque material. In addition, no opening greater than 0"118 shall appear after the test.

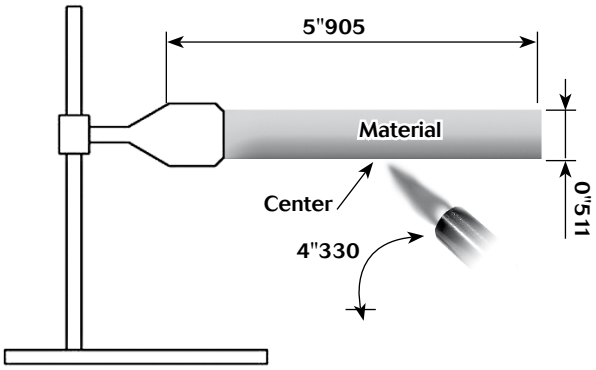

© 2012 – SOURIAU

Underwriter Laboratories

UL 1977

There are several standards which deal with plug and receptacle. Each of them is only for a small area of applications. It could be telecommunication, Etc. The UL 1977 covers single and multipole connectors intended for factory assembly.

Requirements apply to devices in taking into account intensity and voltage. There a categories as follows:

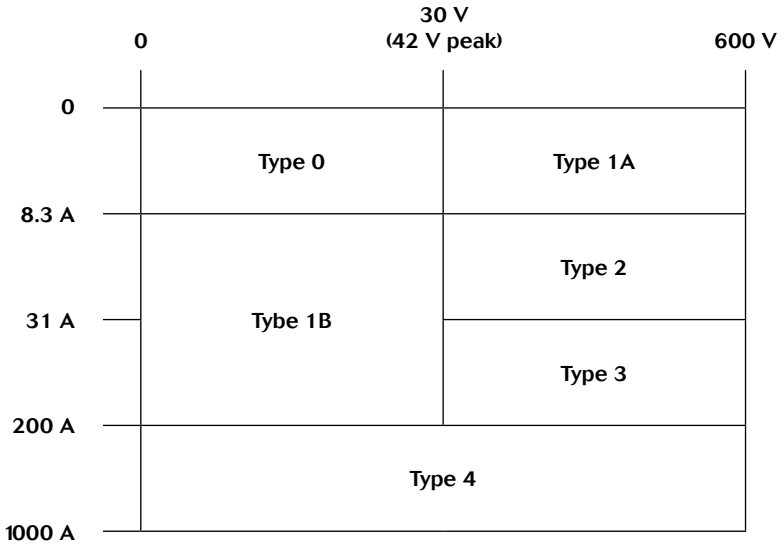

According to above table, the level of performance that has to be reached could be different. Most of them are explained in the following page.

Insulating materials:

Material uses for electrical insulation, as a minimum, have to comply with the characteristics shown below:

- **Minimum ratings for polymeric materials**

Type	Flame rating	Relative thermal index (RTI) Electrical/mechanical w/o impact */**
0	-	50/50
1A	HB	50/50
1B	HB	50/50
2	HB	50/50
3	HB	50/50
4	HB	50/50

* The RTI of the material shall not be lower than the temperature measured during the Temperature Test.
** For a thickness less than that for which a value has been established, the RTI of the minimum thickness with an established value shall be used.

Assembly:

Connector has to be keyed to prevent any mismating that can damage the machine or hurt the user. In the same way, plugs and sockets have to be equipped to protect persons against contact with live parts.
Finally the identified grounding contact shall be located so that the corresponding electrical continuity has to be completed before any other contact.

© 2012 – SOURIAU

Underwriter Laboratories c UL us

UL1977

Spacing:

For a 250V max connector, distance through air or over material shall be 0"047 whereas from 250V to 600V connector the spacing is 3.2 minimum. These distances have to be taken between uninsulated live parts as shown in the matrix below:

- **Applicability of spacing requirements**

Type	Uninsulated live part - uninsulated live part of opposite polarity	Uninsulated live part - uninsulated grounded metal part	Uninsulated live part - exposed dead metal part
0	No	No	No
1A	Yes	Yes	Yes
1B	Yes	Yes	No
2	Yes	Yes	Yes
3	Yes	Yes	Yes
4	Yes	Yes	Yes

An alternative way to determine voltage rating is with the Dielectric-Withstand test. If during one minute there is no arc-over or breakdown the rated voltage is given as given below:

a) 500 volts for a type 1B device
b) 1000 volts plus twice rated voltage for types 1A, 2, 3 and 4 devices.

Marking:

A device shall be legibly marked with the manufacturer's trade name, trade mark, or other descriptive marking by which the organisation responsible for the product may be identified. (Exception: If the device is too small, or where the legibility would be difficult to attain, the manufacturer's name, trademark, or other descriptive marking may appear on the smallest unit container or carton)

The following shall be marked on the device or on the smallest unit container or carton or on a stuffer sheet in the smallest unit container or carton:

a) The catalogue number or an equivalent designation
b) The electrical rating in both volts and amperes, if assigned
c) Whether ac or dc, if restricted
d) Flammability class, if identified

Example - Marking for the arrangement 10-3: **10A 500V UL94 V-0**

© 2012 – SOURIAU

IEC 61984

The norm is dedicated to connectors with rated voltage above 50V and up to 1000V and rated currents up to 125A per contact. But depending of your application connectors should be compliant with another standard. This has to be double checked with the customer.

There are lot of constructional requirements and performances specified in that standard. Most of them are illustrated in greater details hereafter.

Provisions for earthing:

The UTO connector is intended to be used on Class II systems. Even if the purpose of our connector is not to interrupt current, we often see a need to add a protective earth contact. Then this one shall be a "First mate, last break" style. Critically, among all of the normal assumptions we make in designing a connector, this contact has to be considered as a live part and must be protected against electric shock by double or reinforced insulation.

IP Code:

IP is a coding system defined by the IEC 60529 to indicate the degrees of protection provided by an enclosure. The aim of this is to give information regarding the accessibility of live parts against ingress of water and other foreign bodies.

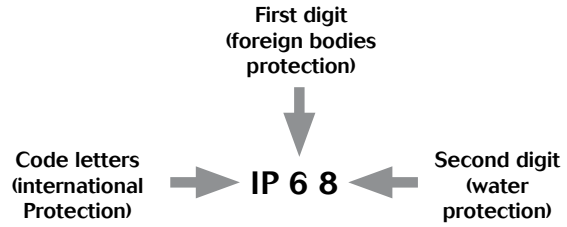

1st digit	Degree of protection	2nd digit	Degree of protection
0	No protection against accidental contact. No protection against solid foreign bodies.	**0**	No protection against water.
1	Protection against contacts with any large area by hand and against large solid foreign bodies with a diameter bigger than 1"968.	**1**	Drip-proof. Protection against vertical water drips.
2	Protection against contacts with the fingers. Protection against solid foreign bodies with a diameter bigger than 0"472.	**2**	Drip-proof. Protection against water drips up to a 15° angle.
3	Protection against tools, wires or similar objects with a diameter bigger than 0"098. Protection against small solid bodies with a diameter bigger than 0"098.	**3**	Spray-proof. Protection against diagonal water drips up to a 60° angle.
4	As 3 however diameter is bigger than 0"039.	**4**	Splash-proof. Protection against splashed water from all directions.
5	Full protection against contacts. Protection against interior injurious dust deposits.	**5**	Hose-proof. Protection against water (out of a nozzle) from all directions.
6	Total protection against contacts. Protection against penetration of dust.	**6**	Protection against temporary flooding.
		7	Protection against temporary immersions.
		8	Protection against water pressure. Pressure to be specified by supplier.

UTO offers high sealing performance IP68 / 69K…
Even in dynamic situations.

In addition to the IEC 60529 we conjointly use the DIN 40050 part 9 which are dedicated to road vehicles. The main differences are:

- **First digit:** 5 replaced by 5K, 6 by 6K. In the DIN the tested equipment is not depressurized as it is in the IEC.
- **Second digit:** 5K and 6K has been added and are equivalent respectively to 5 and 6 but with higher pressure. 9K which represents the High pressure cleaning.

9K	High pressure hose-proof. Protection against high pressure water (out of a nozzle) from all directions.

IEC 61984 ed.2.0 "Copyright © 2008 IEC Geneva, Switzerland.www.iec.ch"
IEC 60664-1 ed.2.0 "Copyright © 2007 IEC Geneva, Switzerland.www.iec.ch"

IEC 61984

Overvoltage

UTO connectors are qualified to be used on systems rated at Overvoltage category III

Per the IEC 60664-1 (formely VDE 0110) each category is linked to the end application and where the device will be implemented:

- **Category IV** (primary overcurrent protection equipment):
Origin of the installation

- **Category III** (Any fixed installation with a permanent connection)
Fixed installation and equipment and for cases where the reliability and the availability is subject to special requirements

- **Category II** (Domestic applicances):
Energy consuming equipment to be supplied from the fixed installation

- **Category I** (Protected electronic circuit):
For connection to circuit in which measures are taken to limit transient overvoltage.

Pollution degree

Per the IEC 60664-1 (formerly VDE 0110) the environment affects the performance of the insulation. Particles can build a bridge between two metal parts. As a rule dust mixed with water can be conductive and more generally speaking metal dust is conductive. Finally, the standard defines 4 levels of pollution:

- **Degree 1** (Air conditioned dry room):
No pollution or only dry, non conductive pollution occurs. The pollution has no influence.

- **Degree 2** (Personal computer in a residential area):
Only non conductive pollution occurs except that occasionally a temporary conductivity caused by condensation is to be expected.

- **Degree 3** (Machine tools):
Conductive pollution occurs or dry non-conductive pollution occurs which becomes conductive due to condensation which is to be expected.

- **Degree 4** (Equipments on roof, locomotives):
Continuous conductivity occurs due to conductive dust, rain or other wet conditions.

Finally, the harsher the environment is, the longer clearance and creepage distances should be. Nonetheless, according the IEC 61984, enclosure rated at IP54 or higher can be dimensioned for a lower pollution degree. This applies to mated connectors disengaged for test and maintenance.

Marking

The marking should give enough details to the user to know what the main characteristics are and without going deep in technical documentation. Below examples identify the suitability of the connector:

- **Example 1:**
Marking of a connector with rated current 16A, rated voltage 400V, rated impulse voltage 6kV and pollution degree 3, 2 and 1 for use in any system, preferably unearthed or delta-earthed systems:

16A 400V 6kV 3

- **Example 2:**
Marking of a connector with rated current 16A, rated insulation voltages line-to-earth 250V, line-to-line 400V, rated impulse voltage 4kV and pollution degree 3, 2 and 1 for use in earthed systems:

16A 250V 400V 4kV 3

© 2012 – SOURIAU

What is NEMA rating ?

• NEMA ratings vs IP ratings

Whereas IP ratings only consider protection against ingress of foreign bodies - first digit - and ingress of water (second digit), NEMA ratings consider these but also verify protection from external ice, corrosive materials, oil immersion, etc.

The correlation between NEMA & IP being limited only to dust and water, we can state that a NEMA type is *equivalent to* an IP rating but it is not possible to say the contrary.

Below a list of some NEMA standards:

Enclosure rating	IP20	IP22	IP55	IP64	IP65	IP66	IP67
Type 1	•						
Type 3				•			
Type 3R		•					
Type 3S				•			
Type 4						•	
Type 4X						•	
Type 6							•
Type 12			•				
Type 13					•		

• indicates compliance

Type 6 rating can be either Type 6 or Type 6P - please see below:

6	IP67	Enclosures constructed for either indoor or outdoor use to provide a degree of protection to personnel against incidental contact with the enclosed equipment, falling dirt, hose-directed water, the entry of water during occasional temporary submersion at a limited depth and damage from external ice formation.
6P	IP67	Enclosures constructed for either indoor or outdoor use to provide a degree of protection to personnel against incidental contact with the enclosed equipment, falling dirt, hose-directed water, the entry of water during prolonged submersion at a limited depth and damage from external ice formation.

© 2012 – SOURIAU

UTL Series

Appendices

#16 coaxial contacts - cabling notices 50
Glossary of terms 57
Part number Index 58

#16 coaxial contacts

Coaxial cable - Contact monocrimp and multipiece

Cable type	Impe-dance	Contact type	Ø over jacket		Ø over dielectric		Inner cond size	Ø outer braid		Male contact kit for coaxial cable	Female contact kit for coaxial cable
			inch	mm	inch	mm	Ext. Ø mm	inch	mm		
RG161/U	75	Multi piece	0.09	2.29	0.057	1.45				RMDXK10D28	RCDXK1D28
RG179A/U	75		0.105	2.67	0.063	1.6	0.3	0.084	2.13 max		
RG179B/U	75		0.105	2.67	0.063	1.6	0.3	0.084	2.13 max		
RG187/U	75		0.11	2.79 max	0.06	1.52	0.3				
RG188/U	50		0.11	2.79 max	0.06	1.52	0.51	0.078	1.98 max		
RG174/U	50		0.11	2.92	0.06	1.52	0.48	0.088	2.24 max		
AMPHENOL 21-598	50		0.105	2.67	0.06	1.52	0.48				
RG196/U	50		0.08	2.03 max	0.034	0.086	0.3				
RG178A/U	50		0.075	1.91	0.034	0.86	0.3	0.054	1.37 max		
RG/188A/U	50	Mono crimp	0.110	2.79	0.06	1.52	0.51	0.078	1.98 max	RMDX6036D28	RCDX6036D28
KX21TVT (europe) RG178 B/U	50		0.075	1.91	0.034	0.86	0.3	0.054	1.37 max	RMDX6034D28	RCDX6034D28
RG178 / BU	50		0.075	1.91	0.034	0.86	0.3	0.054	1.37 max	RMDX6050D28	RCDX6016D28
RG174/U	50		0.115	2.92	0.06	1.52	0.48	0.088	2.24 max	RMDX6032D28	RCDX6032D28
RG188A/U	50		0.11	2.79	0.06	1.52	0.51	0.078	1.98 max	RMDX6036D28	RCDX6036D28
RG316/U	50		0.107	2.72	0.6	1.52	0.51	0.078	2.05 max	RMDX6036D28	RCDX6036D28
raychem 5024A3111	50		0.12	3.05	0.083	2.11	0.64	0.097	2.46	RMDX6052D28	RCDX6052D28
raychem 5026e1614	50		0.083	2.11	0.05	1.27	0.48	0.067	1.7	RMDX6036D28	RCDX6036D28
surprenant pn 8134	-	Multi piece	0.1	2.54	0.058	1.47	0.3			RMDXK10D28	RCDXK1D28
PRD PN 247AS-C1123-001	-	Mono crimp	0.103	2.62	0.06	1.52	0.51	0.078	1.98	RMDX6018D28	RCDX6018D28
PRD PN 247AS-C1251	-		0.092	2.34	0.05	1.27	0.64	0.067	1.7	RMDX6018D28	RCDX6018D28
JUDD C15013010902	-		0.087	2.13	0.05	1.27	0.48	0.066	1.67	RMDX6036D28	RCDX6036D28
CDC PIN22939200	-		0.09	2.29	0.048	1.22	0.3	0.064	1.63	RMDX6046D28	RCDX6016D28
CDC PIN22939200	-		0.09	2.29	0.048	1.22	0.3	0.064	1.63	RMDX6050D28	RCDX6016D28
CDC PIN245670000	-		0.104	2.64	0.067	1.7	0.3	0.083	2.11	RMDX6050D28	RCDX6016D28
ampex	-		0.114	2.9	0.075	1.91	0.38	0.09	1.29	RMDX6032D28	RCDX6032D28
TI PN 920580	-		0.7	1.78	0.038	0.96	0.48	0.054	1.37	RMDX6024D28	RCDX6024D28
Honeywell PN 58000062	-		0.12	3.05	0.077	1.96	0.41 solid	0.096	2.44	RMDX6026D28	RCDX6026D28
-	-		0.104	2.64	0.067	1.7	0.3		2.11	RMDX6050D28	-
-	-		0.09	2.29	0.048	1.22	0.3		1.63	RMDX6050D28	-
-	-		0.114	2.9	0.075	1.91	0.38		1.29	RMDX6032D28	RCDX6032D28
-	-		0.07	1.78	0.038	0.96	0.48		1.37	RMDX6024D28	RCDX6024D28
-	-		0.12	3.05	0.077	1.96	0.41		2.44	RMDX6026D28	RCDX6026D28

48h sample service

© 2012 – SOURIAU

Twisted cable - Contact monocrimp and multipiece

Cable type	Contact type	Inner AWG cond	Ø over jacket (single wire)		Inner cond size		Ø outer braid		Male contact kit for coaxial cable	Female contact kit for coaxial cable
			inch	mm	Stranded definition	Ext. Ø mm	inch	mm		
2#24 stranded mil w 16878 type B	Multi piece	24	0.049	1.24 max	7/.008		-	-	RMDXK10D28	RCDXK1D28
2 #24 solid mil-w-76 type LW		24	0.047	1.12 max	1/.0201		-	-	RMDXK10D28	RCDXK1D28
2 #26 stranded mil w 76 type LW or mil w16878 type b&e		26	0.043	1.09 max	7/.0063	0.16	-	-	RMDXK10D28	RCDXK1D28
2 #28 solid mil-w-81822/3		28	0.028	0.71 max			-	-	RMDXK10D28	RCDXK1D28
TWISTED PAIR 1/.201 SOLID MIL w 76 TYPE lw or MIL W 16878		26	0.044	1.12 max	1/.0201	0.511	-	-	RMDXK10D28	RCDXK1D28
twisted pair solid mil w 81822/3		28	0.028	0.71 max	1/.0126	0.32	-	-	RMDXK10D28	RCDXK1D28
#28 7/.0036 per Hitachi spec ec-711 (13-2820)	Mono crimp	-	0.046	1.17	7/.0036	-	-	-	RMDX6031D28 + YORX090	RCDX6031D28 + YORX090
20218201		-	0.028	0.71	-	-	-	-	RMDX6031D28 + YORX090	RCDX6031D28 + YORX090
#30 solid		-	0.025	0.64	-	-	-	-	RMDX6015D28 + YORX090	RCDX6015D28 + YORX090
#26 7/.0063		26	0.028	0.71	7/.063	0.16	-	-	RMDX6031D28 + YORX090	RCDX6031D28 + YORX090
#26 19/.004		26	0.049	1.24	19/.004	-	-	-	RMDX6019D28 + YORX090	RCDX6019D28 + YORX090
#24 7/.008		24	0.049	1.24	7/.008	-	-	-	RMDX6019D28 + YORX090	RCDX6019D28 + YORX090
#24 19/.005		24	0.057	1.45	19/.005	-	-	-	RMDX6019D28 + YORX090	RCDX6019D28 + YORX090
-		26	-	1.25	-	-	-	19x0.1	RMDX6019D28 + YORX090	RCDX6019D28 + YORX090
-		24	-	1.25	-	-	-	7x0.2	RMDX6019D28 + YORX090	RCDX6019D28 + YORX090
-		24	-	1.45	-	-	-	19x0.13	RMDX6019D28 + YORX090	RCDX6019D28 + YORX090
-		26	-	0.7	-	-	-	7x0.16	RMDX6031D28 + YORX090	RCDX6031D28 + YORX090

© 2012 – SOURIAU

#16 coaxial contacts

Twisted pair cable multipiece contact cabling

Cable reference	Contact type	Male contact	Female contact	Crimp tool	Die set	Stop bushing	Cable strip length			Inner conductor crimp		Braid crimp	
							A	B	C	g dim	t dim	g dim	t dim
2#24 stranded mil w 16878 type B	Multi piece	RMDXK10D28	RCDXK1D28	M10S1J	-	-	See assembly notice						
2 #24 solid mil-w-76 type LW													
2 #26 stranded mil w 76 type LW or mil w16878 type B & E													
2 #28 solid mil-w-81822/3													
twisted pair 1/.201 solid mil w 76 type LW or mil w 16878													
twisted pair solid mil w 81822/3													

Female contact

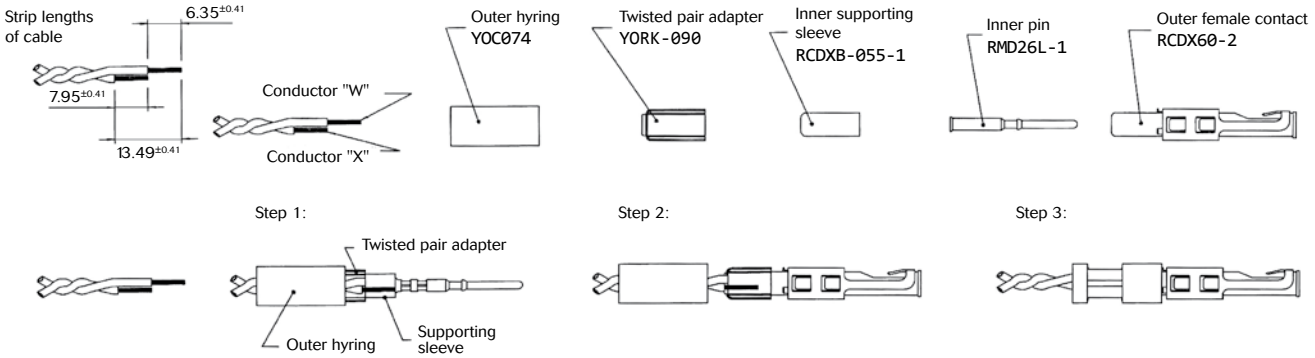

Male contact

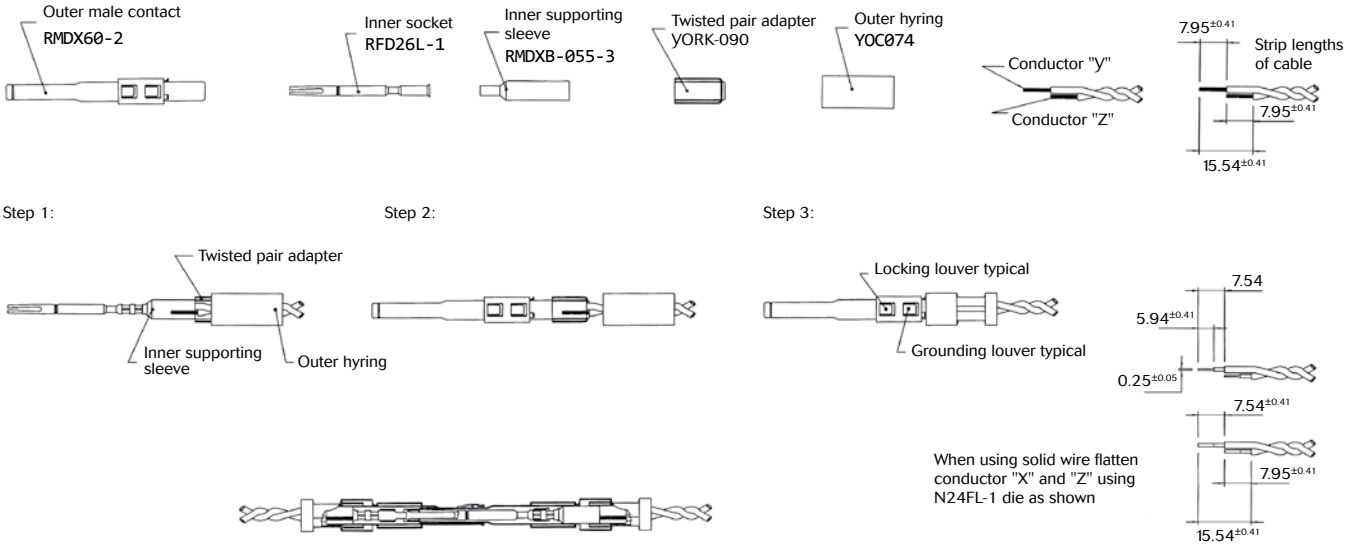

Note : all dimensions are in mm

© 2012 – SOURIAU

Twisted pair cable monocrimp contact cabling

Cable reference	Contact type	Male contact	Female contact	Crimp tool	Die set	Stop bushing	Cable strip length			Inner conductor crimp		Braid crimp	
							A	B	C	g dim	t dim	g dim	t dim
#28 7/.0036 per Hitachi spec ec-711 (13-2820)	Mono crimp	RMDX6031D28 + YORX090	RCDX6031D28 + YORX090	M10S1J	S80	SL105	4.7	6.1	4.32	1.30 to 1.12	1.4 to 1.22	2.97 to 2.84	3.07 to 2.9
20218204					S80	SL105	3.94	6.1	3.16	1.30 to 1.17	1.4 to 1.22	2.97 to 2.84	3.07 to 2.79
#30 solid					S83	SL105	4.7	6.1	4.06	1.22 to 1.12	1.35 to 1.22	2.97 to 2.84	3.12 to 2.95
#26 7/.0063					S80	SL105	4.7	6.1	4.06	1.30 to 1.17	1.4 to 1.22	2.97 to 2.84	3.07 to 2.9
#26 19/.004					M10SG8 ASSY'Y TOOL DIE SET STOP BUSHING M10S1J TOOL		4.7	6.1	4.06	1.22 to 1.17	1.35 to 1.22	2.84 to 2.79	3.12 to 2.97
#24 7/.008							4.7	6.1	4.06	1.22 to 1.17	1.35 to 1.22	2.84 to 2.79	3.12 to 2.97
#24 19/.005							4.7	6.1	4.06	1.22 to 1.17	1.35 to 1.22	2.84 to 2.79	3.12 to 2.97
AWG26 (19x0.1)					M10SG8 crimping kit		4.7	6	4				
AWG24 (7x0.2)													
AWG24 (19x0.13)													
AWG26 (7x0.16)					S80	SL150							

- Select appropriate monocrimp coax twisted pair contact and cable combination.
- Select appropriate crimp tooling (hand tool, S-die set, stop bushing).
- Strip the twisted pair cable to the designated wire strip lengths.
- Insert the stripped cable into the contact. One cable is to be inserted into the inside diameter of hyring, and pushed forwaerd into the inner contact. The second cable is to be inserted between the outside diameter of hyring and the inside diameter of the outer contact body.
- Crimp the contact.

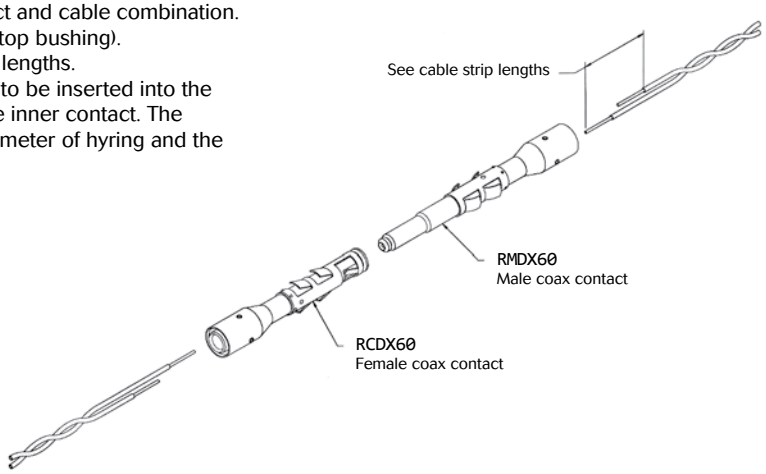

Cable strip length

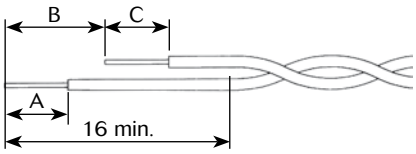

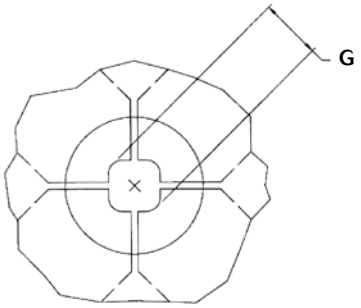

Braid crimp (G) to be measured with die set fully closed

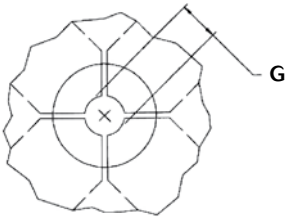

Inner conductor crimp (G) to be measured with die set fully closed

Note : all dimensions are in mm

© 2012 – SOURIAU

#16 coaxial contacts

Multipiece male contact with coax cable

Cable reference	Contact	Hyring complementary compoments	Outer contact crimp tool		Inner contact crimp tool		Cable strip length		
			Crimp tool M10S1J		Crimp tool M10S1J				
			Die set	Stop bushing	Die set	Stop bushing	A	B	C
RG161U	Male: RMDXK10D28	YOC074	S221	SL471	S23D2	SL46D2	4.37	7.95	15.88
RG179							4.37	7.95	15.88
RG187U							4.37	7.95	15.88
RG188/U					S26D2		4.37	7.95	15.88
RG174/U							4.37	7.95	15.88
RG178A/U		YOC074 + RMDXB0553			S23D2		7.54	9.12	17.53
RG196U							7.54	9.12	17.53
AMPHENOL 21-598		YOC074			-		4.37	7.95	15.88
surprenant pn 8134					-		4.37	7.95	15.88

Multipiece kit details

RMDXK10D28 includes	RMDX602D28	Outer contact
	RFD26L1D28	Inner contact
	YOC074	Outer hyring
	RMDXB0553	Inner supporting sleeve

Cable stip length

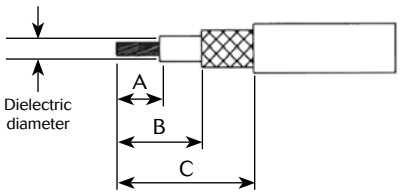

Contact assembly with dielectric diameter over 1.4mm - without inner supporting sleeve

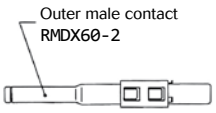

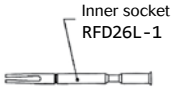

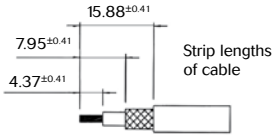

Step 1:
- Assemble outer hyring onto cable
- Assemble inner socket to inner conductor and crimp

Step 2:
- Insert the assembly into the outer male contact until the inner socket snaps into place
- The cable braid (shield) should now cover the barrel of the outer male contact as shown

Step 3:
- Slide outer hyring forward against spring and crimp in place as shown

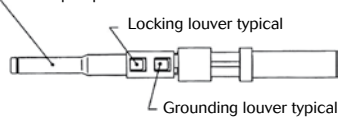

Contact assembly with dielectric diameter under 1.4mm - with inner supporting sleeve

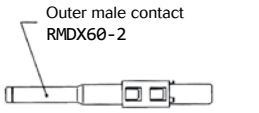

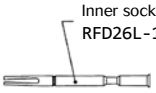

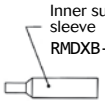

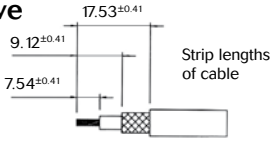

Step 1:
- Assemble outer hyring onto cable
- Assemble supporting sleeve over dielectric and under braid
- Assemble inner socket to inner conductor, push back against sleeve and crimp

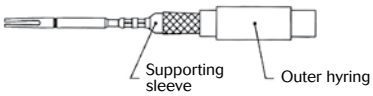

Step 2:
- Insert the assembly into the outer male contact until the inner socket snaps into place
- The cable braid (shield) should now cover the barrel of the outer male contact as shown

Step 3:
- Slide outer hyring forward against spring and crimp in place as shown

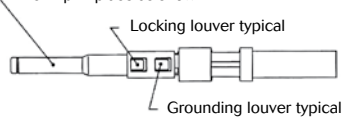

Note : all dimensions are in mm

48h sample service

© 2012 – SOURIAU

Multipiece female contact with coax cable

Cable reference	Contact	Hyring complementary compoments	Outer contact crimp tool		Inner contact crimp tool		Cable strip length		
			Crimp tool M10S1J		Crimp tool M10S1J				
			Die set	Stop bushing	Die set	Stop bushing	A	B	C
RG161U	Female: RCDXK1D28	YOC074	S221	SL471	S23D2	SL46D2	4.37	-	11.13
RG179							4.37		11.13
RG187U							4.37		11.13
RG188/U					S26D2		4.37		11.13
RG174/U							4.37		11.13
RG178A/U		YOC074 + RCDXB0553			S23D2		6.35		11.13
RG196U							6.35		11.13
AMPHENOL 21-598		YOC074			-		4.37		11.13
surprenant pn 8134					-		4.37		11.13

Multipiece kit details

RCDXK1D28 includes	RCDX602D28	Outer contact
	RMD26L1D28	Inner contact
	YOC074	Outer hyring
	RCDXB0553	Inner supporting sleeve

Cable stip length

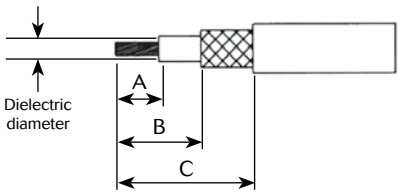

Contact assembly with dielectric diameter over 1.4mm - without inner supporting sleeve

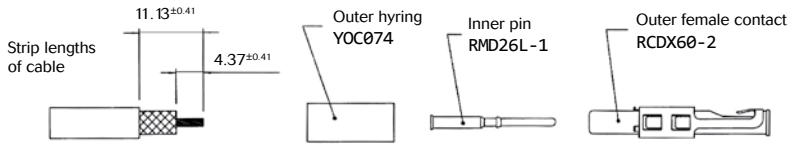

Step 1:
- Assemble outer hyring onto cable
- Assemble inner pin to inner conductor and crimp

Step 2:
- Insert the assembly into the outer female contact until the inner pin snaps into place
- The cable braid (shield) should now cover the barrel of the outer female contact as shown

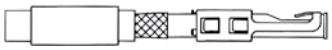

Step 3:
- Slide outer hyring forward against spring and crimp in place as shown

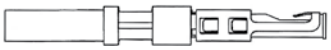

Contact assembly with dielectric diameter under 1.4mm - with inner supporting sleeve

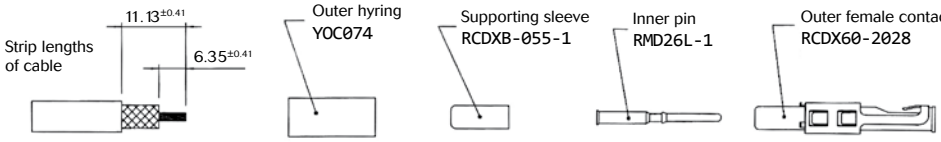

Step 1:
- Assemble outer hyring onto cable
- Assemble supporting sleeve over dielectric and under braid
- Assemble inner pin to inner conductor, push back against sleeve and crimp

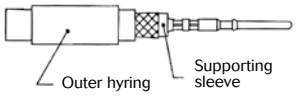

Step 2:
- Insert the assembly into the outer female contact until the inner pin snaps into place
- The cable braid (shield) should now cover the barrel of the outer female contact as shown

Step 3:
- Slide outer hyring forward against spring and crimp in place as shown

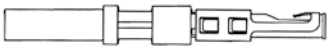

48h sample service

Note : all dimensions are in mm

© 2012 – SOURIAU

#16 coaxial contacts

Coax cable with monocrimp contact cabling

Cable reference	Male contact	Female contact	Crimp tool	Die set	Stop bushing	Cable strip length			Inner conductor crimp		Braid crimp	
						A	B	C	g dim	t dim	g dim	t dim
CDC PIN22939200	RMDX6046D28 (Y)	RCDX6016D28 (Y)	M10S1J	S80	SL105	4.19	5.97	8.51	1.30/1.17	1.40/1.22	2.77/2.64	3.02/2.84
CDC PIN22939200	RMDX6046D28 (Y)	RCDX6016D28 (Y)		S87	SL105	5.08	6.35	8.89	1.30/1.17	1.40/1.22	2.77/2.64	3.02/2.84
CDC PIN245670000	RMDX6050D28 (Y)	RCDX6016D28 (Y)		S80	SL105	5.08	6.35	8.89	1.30/1.17	1.40/1.22	2.97/2.84	3.12/2.95
KX21TVT (europe) RG178 B/U	RMDX6034D28	RCDX6034D28		S82	SL105	5.08	6.35	8.89	1.30/1.17	1.32/1.17	2.84/2.74	3.07/2.9
RG178 / BU	RMDX6050D28 (Y)	RCDX6016D28 (Y)		S87	SL105	5.08	6.35	8.89	1.30/1.17	1.40/1.22	2.77/2.64	3.02/2.84
ampex	RMDX6032D28 (Y)	RCDX6032D28 (Y)		S80	SL105	5.08	6.35	11.68	1.30/1.17	1.40/1.22	2.97/2.84	3.12/2.95
TI PN 920580	RMDX6024D28 (Y)	RCDX6024D28 (Y)		S82	SL105	5.08	6.35	8.89	1.35/1.19	1.42/1.27	2.87/2.74	3.07/2.9
RG174/U	RMDX6032D28 (Y)	RCDX6032D28 (Y)		S80	SL105	5.08	6.35	11.68	1.30/1.17	1.40/1.22	2.97/2.84	3.12/2.95
Honeywell PN 58000062	RMDX6026D28 (Y)	RCDX6026D28 (Y)		S82	SL105	5.08	6.35	8.89	1.35/1.19	1.42/1.27	2.87/2.74	3.07/2.9
RG188A/U	RMDX6036D28 (Y)	RCDX6036D28 (Y)		S80	SL105	5.08	6.35	11.68	1.30/1.17	1.40/1.22	2.97/2.84	3.12/2.95
RG316/U	RMDX6036D28 (Y)	RCDX6036D28 (Y)		S80	SL105	5.08	6.35	11.68	1.30/1.17	1.40/1.22	2.97/2.84	3.12/2.95
PRD PN 247AS-C1123-001	RMDX6018D28	RCDX6018D28		M10SG8 ASSY'Y TOOL DIE SET STOP BUSHING M10S1J TOOL		5.08	6.35	8.89	1.22/1.17	1.35/1.22	2.92/2.79	3.12/2.97
PRD PN 247AS-C1251	RMDX6018D28	RCDX6018D28				5.08	6.35	8.89	1.22/1.17	1.35/1.22	2.92/2.79	3.12/2.97
raychem 5024A3111	RMDX6052D28	RCDX6052D28		S88	SL105	5.08	6.35	11.68	1.37/1.27	1.45/1.32	2.92/2.79	
raychem 5026e1614	RMDX6036D28 (Y)	RCDX6036D28 (Y)		M10SG8 ASSY'Y TOOL DIE SET STOP BUSHING M10S1J TOOL		5.08	6.35	8.89	1.22/1.17	1.35/1.22	2.92/2.79	3.12/2.97
JUDD C15013010902	RMDX6036D28 (Y)	RCDX6036D28 (Y)				5.08	6.35	8.89	1.22/1.17	1.35/1.22	2.92/2.79	3.12/2.97
inner cond. #30, braid diam 2.64	RMDX6050D28 (Y)	-		S80	SL105	5.1	6.35	8.9	-	-	-	-
inner cond. #30, braid diam 2.29	RMDX6050D28 (Y)	-		S87	SL105	4.2	6.35	8.5	-	-	-	-
inner cond. #28, braid diam 2.9	RMDX6032D28 (Y)	RCDX6032D28 (Y)		S80	SL105	5.1	6.35	11.7	-	-	-	-
inner cond. #26, braid diam 1.78	RMDX6024D28 (Y)	RCDX6024D28 (Y)		S82	SL105	5.1	6.35	8.9	-	-	-	-
inner cond. #26, braid diam 3.05	RMDX6026D28 (Y)	RCDX6026D28 (Y)		S82	SL105	5.1	6.35	8.9	-	-	-	-

- Select appropriate cable and contact combination.
- Select appropriate crimp tooling (hand tool, S-die set, stop bushing).
- Strip coax cable to the designated wire strip lengths.
- Insert the stripped coax into the rear of the contact.
- Crimp the contact.

Cable strip length

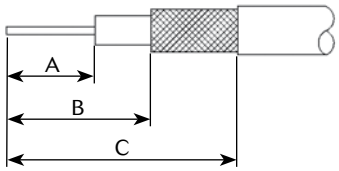

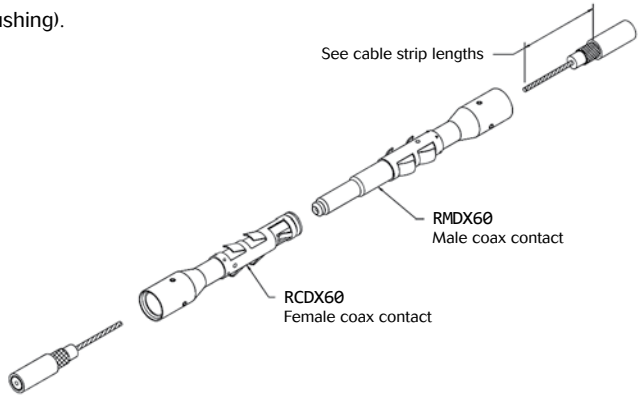

Note : all dimensions are in mm

48h sample service (Y)

© 2012 – SOURIAU

Glossary of terms

• **Clearance**
Per the IEC 60664-1 it is the shortest distance between two conductive parts even over the air.

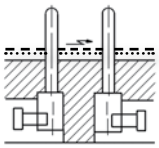

• **Creepage distance**
Per the IEC 60664-1 it represents the shortest distance along the surface of the insulating material between two conductive parts.

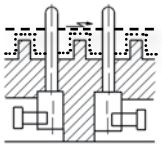

Air gap
Creepage distance

• **Working voltage**
Per the IEC 60664-1 it is the highest r.m.s. value of A.C. or D.C. voltage across any particular insulation which can occur when the equipment is supplied at rated voltage.

• **Rated impulse voltage**
Impulse withstands voltage value assigned by the manufacturer to the equipment or to a part of it characterizing the specified withstand capability of its insulation against transient overvoltage.

• **Working current**
It is the maximum continuous and not interrupted current able to be carried by all contacts without exceeding the maximum temperature of the insulating material.

• **Transient voltage**
Extract from the IEC 60664-1: Short duration overvoltage of a few millisecond or less, oscillatory or non-oscillatory, usually highly damped.

• **CTI (Comparative Tracking Index)**
The CTI value is commonly used to characterize the electrical breakdown properties of an insulating material. It allows users to know the tendency to create creepage paths. This value represents the maximum voltage after 50 drops of ammonium chloride solution without any breakdown.

• **RTI (Relative temperature Index):**
Extract from ULs website:
"Maximum service temperature for a material, where a class of critical property will not be unacceptably compromised through chemical thermal degradation, over the reasonable life of an electrical product, relative to a reference material having a confirmed, acceptable corresponding performance defined RTI.

- **RTI Elec**: Electrical RTI, associated with critical electrical insulating properties.

- **RTI Mech Imp**: Mechanical Impact RTI, associated with critical impact resistance, resilience and flexibility properties.

- **RTI Mech Str:** Mechanical Strength (Mechanical without Impact) RTI, associated with critical mechanical strength where impact resistance, resilience and flexibility are not essential"

© 2012 – SOURIAU

Part number Index

Mechanics

UTL0103G1P..... P. 14
UTL0103G1P03..... P. 14
UTL0103G1S..... P. 14
UTL0103G1S03..... P. 14
UTL1103G1P..... P. 14
UTL1103G1P03..... P. 14
UTL1103G1S..... P. 14
UTL1103G1S03..... P. 14
UTL6103G1P..... P. 14
UTL6103G1P03..... P. 14
UTL6103G1S..... P. 14
UTL6103G1S03..... P. 14
UTL7103G1P..... P. 14
UTL7103G1P03..... P. 14
UTL7103G1S..... P. 14
UTL7103G1S03..... P. 14

Harnesses

UTLMKT63G1P3FT..... P. 14
UTLMKT63G1P6FT..... P. 14
UTLMKT63G1P12FT..... P. 14
UTLMKT63G1S3FT..... P. 14
UTLMKT63G1S6FT..... P. 14
UTLMKT63G1S12FT..... P. 14
UTLMKT63G1SP3FT..... P. 14
UTLMKT63G1SP6FT..... P. 14
UTLMKT63G1SP12FT..... P. 14
UTLMKT613G1SP3FT..... P. 14
UTLMKT613G1SP6FT..... P. 14
UTLMKT613G1SP12FT..... P. 14

Accessories

SWSFILLERPLUG..... P. 16
UTL103G1PDCG68..... P. 16
UTL103G1SDCG68..... P. 16
UTL10DCG..... P. 16
UTL610DCG..... P. 16

Contacts

RC14M25K..... P. 23
RC14M30K..... P. 23
RC16M23K..... P. 23
RC16M25K..... P. 23
RC20M12K..... P. 23
RC20M13K..... P. 23
RC24M9K..... P. 23
RC28M1K..... P. 23
RCDX6015D28..... P. 51
RCDX6016D28..... P. 50
RCDX6018D28..... P. 50
RCDX6019D28..... P. 51
RCDX6024D28..... P. 50
RCDX6026D28..... P. 50
RCDX602D28..... P. 55
RCDX6031D28..... P. 51
RCDX6032D28..... P. 50
RCDX6034D28..... P. 50
RCDX6036D28..... P. 50
RCDX6052D28..... P. 50
RCDXB0553..... P. 55
RCDXK1D28..... P. 50
RFD26L1D28..... P. 54
RM14M25K..... P. 23
RM14M30K..... P. 23
RM16M23K..... P. 23
RM16M25K..... P. 23
RM20M12K..... P. 23
RM20M13K..... P. 23
RM24M9K..... P. 23
RM28M1K..... P. 23
RMD26L1D28..... P. 55
RMDX6015D28..... P. 51
RMDX6018D28..... P. 50
RMDX6019D28..... P. 51
RMDX602D28..... P. 54
RMDX6024D28..... P. 50
RMDX6026D28..... P. 50
RMDX6031D28..... P. 51
RMDX6032D28..... P. 50
RMDX6034D28..... P. 50
RMDX6036D28..... P. 50
RMDX6046D28..... P. 50
RMDX6050D28..... P. 50
RMDX6052D28..... P. 50
RMDXB0553..... P. 54
RMDXK10D28..... P. 50
SC14M1S18..... P. 23
SC14ML1S18..... P. 23
SC14M1TK6..... P. 23
SC14ML1TK6..... P. 23
SC16M1S18..... P. 23
SC16M11S18..... P. 23
SC16ML1S18..... P. 23
SC16ML11S18..... P. 23
SC16M1TK6..... P. 23
SC16M11TK6..... P. 23
SC16ML1TK6..... P. 23
SC16ML11TK6..... P. 23
SC20M1S18..... P. 23
SC20ML1S18..... P. 23
SC20M1TK6..... P. 23
SC20ML1TK6..... P. 23
SC24M1S18..... P. 23
SC24ML1S18..... P. 23
SC24M1TK6..... P. 23
SC24ML1TK6..... P. 23
SM14M1S18..... P. 23
SM14ML1S18..... P. 23
SM14M1TK6..... P. 23
SM14ML1TK6..... P. 23
SM16M1S18..... P. 23
SM16M11S18..... P. 23
SM16ML1S18..... P. 23
SM16ML11S18..... P. 23
SM16M1TK6..... P. 23
SM16M11TK6..... P. 23
SM16ML1TK6..... P. 23
SM16ML11TK6..... P. 23
SM20M1S18..... P. 23
SM20ML1S18..... P. 23
SM20M1TK6..... P. 23
SM20ML1TK6..... P. 23
SM24M1S18..... P. 23
SM24ML1S18..... P. 23
SM24M1TK6..... P. 23
SM24ML1TK6..... P. 23
YOC074..... P. 54

Tooling

M10S1J..... P. 52
M10SG8..... P. 53
RX2025GE1..... P. 29
S16RCM14..... P. 29
S16RCM1425 ..... P. 29
S16RCM16..... P. 29
S16RCM1625..... P. 29
S16RCM20..... P. 29
S16SCM20..... P. 29
S16SCML1..... P. 29
S16SCML11..... P. 29
S221..... P. 54
S23D2..... P. 54
S26D2..... P. 54
S471..... P. 54
S80..... P. 53
S83..... P. 53
S82..... P. 56
S87..... P. 56
SL105..... P. 53
SL46D2..... P. 54
Shandles..... P. 29

© 2012 – SOURIAU

© 2012 – SOURIAU

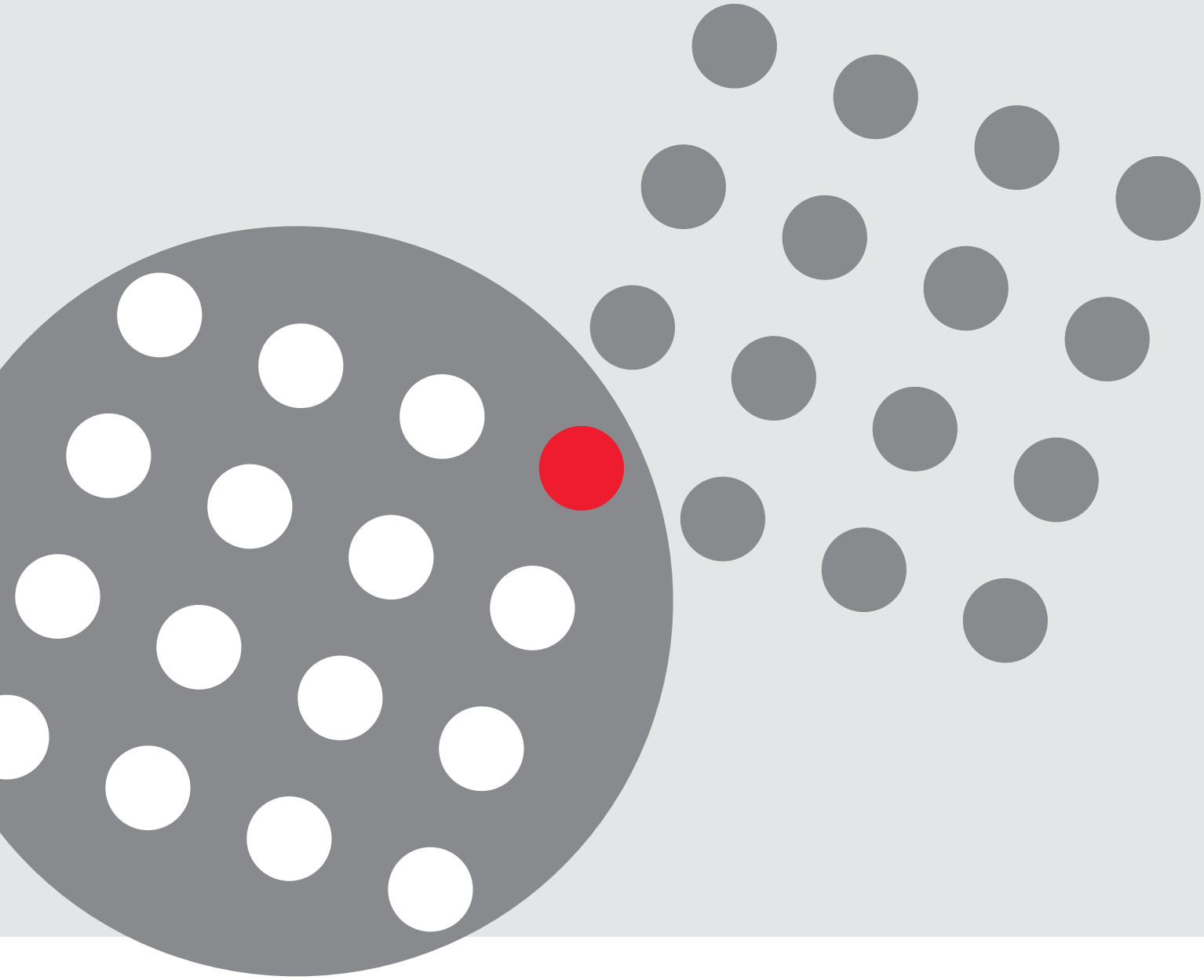

SOURIAU

www.souriau-industrial.com

contactindustry@souriau.com

Esterline
Connection Technologies

XXXXCAUS02EN © Copyright SOURIAU Auguste 2012- All information in this document presents only general particulars and shall not form part of any contract. All rights reserved to SOURIAU for changes without prior notification or public announcement. Any duplication is prohibited, unless approved in writing.