阅读申明

1.本站收集的数据手册和产品资料都来自互联网，版权归原作者所有。如读者和版权方有任何异议请及时告之，我们将妥善解决。
2.本站提供的中文数据手册是英文数据手册的中文翻译，其目的是协助用户阅读，该译文无法自动跟随原稿更新，同时也可能存在翻译上的不当。建议读者以英文原稿为参考以便获得更精准的信息。
3.本站提供的产品资料，来自厂商的技术支持或者使用者的心得体会等，其内容可能存在描叙上的差异，建议读者做出适当判断。
4.如需与我们联系，请发邮件到marketing@iczoom.com，主题请标有“数据手册”字样。

Read Statement

1. The datasheets and other product information on the site are all from network reference or other public materials, and the copyright belongs to the original author and original published source. If readers and copyright owners have any objections, please contact us and we will deal with it in a timely manner.

2. The Chinese datasheets provided on the website is a Chinese translation of the English datasheets. Its purpose is for reader’s learning exchange only and do not involve commercial purposes. The translation cannot be automatically updated with the original manuscript, and there may also be improper translations. Readers are advised to use the English manuscript as a reference for more accurate information.

3. All product information provided on the website refer to solutions from manufacturers’ technical support or users the contents may have differences in description, and readers are advised to take the original article as the standard.

4. If you have any questions, please contact us at marketing@iczoom.com and mark the subject with “Datasheets”.

Downloaded from www.iczoom.com

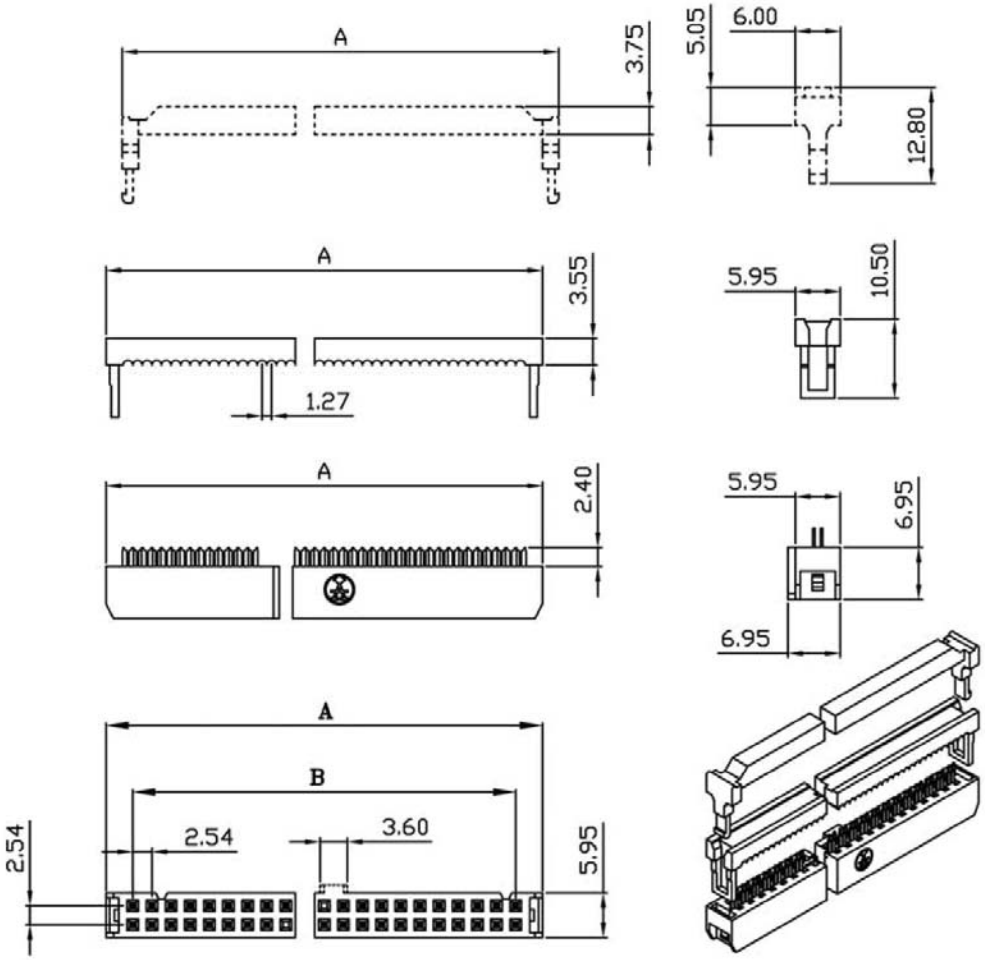

DIMENSION					
POSITION	A	B	POSITION	A	B
06P	12.18	05.08	24P	35.04	27.94
08P	14.72	07.62	26P	37.58	30.48
10P	17.26	10.16	30P	42.66	35.56
12P	19.80	12.70	34P	47.74	40.64
14P	22.34	15.24	36P	50.43	43.18
16P	24.88	17.78	40P	55.36	48.26
18P	27.42	20.32	44P	60.64	53.34
20P	29.96	22.86	50P	68.06	60.96

POSITION	A	B
60P	80.74	76.54
64P	85.82	81.62

MATERIALS:
INSULATOR:P.B.T.30%GLASS FIBER,UL94V-0
CONTACT MATERIAL:BRASS OR PHOSPHOR BRONZE,
UNDERPLATE: NICKEL
CONTACT AREA: 100u" TIN/LEAD FREE(MATTE TIN)
ELECTRICAL:
CURRENT RATING:1AMP.
INSULATION RESISTANCE:1000MΩ MIN.
DIELECTRIC WITHSTANDING:500VAC
OPERATING TEMPERATURE:-55°C~+105°C

RoHS Complaint

Scale	1:1
TOLERANCE	
X.X	±0.40
X.XX	±0.25
X.XXX	±0.15
Angle	±3°

Modification	Date	Name

		Name
Drawn	10.19.11	Chappell
Approved		

ASSMANN WSW components

Item No.
AWPxx-7541-T-R **With Strain Relief**
AWPxx-7540-T-R **Without Strain Relief**

Title IDC-Socket, Pitch 2.54X2.54mm, Central Lug, Tin Plated

Drawing No.

rev00

Replace

Sheet