阅读申明

1.本站收集的数据手册和产品资料都来自互联网，版权归原作者所有。如读者和版权方有任何异议请及时告之，我们将妥善解决。
2.本站提供的中文数据手册是英文数据手册的中文翻译，其目的是协助用户阅读，该译文无法自动跟随原稿更新，同时也可能存在翻译上的不当。建议读者以英文原稿为参考以便获得更精准的信息。
3.本站提供的产品资料，来自厂商的技术支持或者使用者的心得体会等，其内容可能存在描叙上的差异，建议读者做出适当判断。
4.如需与我们联系，请发邮件到marketing@iczoom.com，主题请标有“数据手册”字样。

Read Statement

1. The datasheets and other product information on the site are all from network reference or other public materials, and the copyright belongs to the original author and original published source. If readers and copyright owners have any objections, please contact us and we will deal with it in a timely manner.

2. The Chinese datasheets provided on the website is a Chinese translation of the English datasheets. Its purpose is for reader’s learning exchange only and do not involve commercial purposes. The translation cannot be automatically updated with the original manuscript, and there may also be improper translations. Readers are advised to use the English manuscript as a reference for more accurate information.

3. All product information provided on the website refer to solutions from manufacturers’ technical support or users the contents may have differences in description, and readers are advised to take the original article as the standard.

4. If you have any questions, please contact us at marketing@iczoom.com and mark the subject with “Datasheets”.

Downloaded from www.iczoom.com

CLOCK OSCILLATORS (SMD • Plastic Package)

CITIZEN Micro HumanTech

RoHS Compliant Optional

CMX−309 SERIES

1000pcs/reel

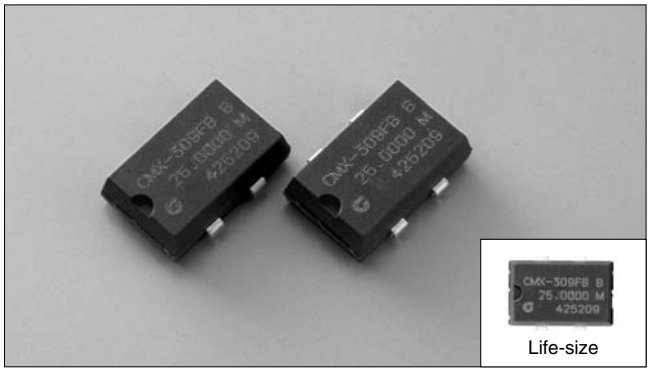

■FEATURES

- Embeded with heat resistant cylinder type crystal bring highly stable characteristics.
- Automatic mounting and reflowable Type.
- Low power consumption with output enable function (OE).
- Suitable for various applications such as communication devices, AV devices, automotive devices and measuring instruments.

■DIMENSION [mm]

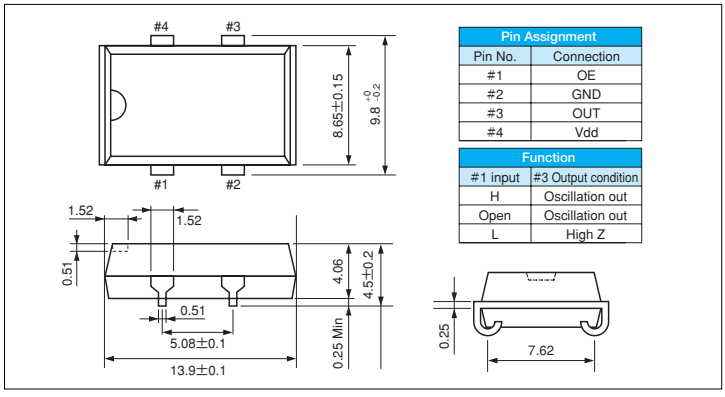

Pin Assignment	
Pin No.	Connection
#1	OE
#2	GND
#3	OUT
#4	Vdd

Function	
#1 input	#3 Output condition
H	Oscillation out
Open	Oscillation out
L	High Z

■SOLDER PAD LAYOUT [mm]

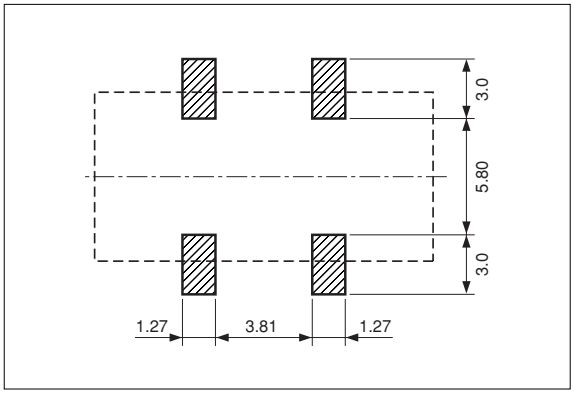

■STANDARD SPECIFICATIONS

＊Model is determined by the selection for the frequency , the supply voltage ,the duty and the frequency stability.

Item \ Model	CMX−309			
	FL(＊)/ FS(＊)	HW(＊)/ HS(＊)	FB(＊)/ FA(＊)	HB(＊)/ HA(＊)
Frequency Range	1.000MHz～30.000MHz	30.001MHz～70.000MHz	1.000MHz～30.000MHz	30.001MHz～70.000MHz
Supply Voltage	Vdd : 5.0V±0.5V		Vdd : 3.3V±0.3V	
Duty — TTL level (1.4V)	FL:45～55%,FS:40～60%	HW:45～55%,HS:40～60%	—	
Duty — CMOS level (1/2 Vdd)	FL:40～60%,FS:45～55%	HW:40～60%,HS:45～55%	FB:40～60%,FA:45～55%	HB:40～60%,HA:45～55%
Frequency Stability (＊)	C : ±100ppm(−10℃～+70℃), B : ±50ppm(−10℃～+70℃)			
Operating Temperature Range	−40℃～+85℃			
Storage Temperature Range	−55℃～+125℃			
Current consumption	23mA Max.	35mA Max.	9mA Max.	20mA Max.
Output Voltage — V_{OH}	0.9Vdd Min.			
Output Voltage — V_{OL}	0.4V Max.		0.1Vdd Max.	
Output Load — TTL	10 TTL Max.		—	
Output Load — CMOS	50pF Max.		30pF Max.	
Rise and Fall Time — TTL	8 nsec Max.	5 nsec Max.	—	
Rise and Fall Time — CMOS	8 nsec Max.	7 nsec Max.	6 nsec Max.	
Start-up time	4 msec Max.	10 msec Max.	4 msec Max.	10 msec Max.
Input Voltage	V_{IH} : 2.0V Min , V_{IL} : 0.8V Max			V_{IH} : 2.4V Min , V_{IL} : 0.6V Max
Disable current	12 mA Max.	28 mA Max.	5 mA Max.	15 mA Max.
Aging (first year)	±5ppm / year Max.			

http://www.citizen.co.jp/crystal/index.html