阅读申明

1.本站收集的数据手册和产品资料都来自互联网，版权归原作者所有。如读者和版权方有任何异议请及时告之，我们将妥善解决。
2.本站提供的中文数据手册是英文数据手册的中文翻译，其目的是协助用户阅读，该译文无法自动跟随原稿更新，同时也可能存在翻译上的不当。建议读者以英文原稿为参考以便获得更精准的信息。
3.本站提供的产品资料，来自厂商的技术支持或者使用者的心得体会等，其内容可能存在描叙上的差异，建议读者做出适当判断。
4.如需与我们联系，请发邮件到marketing@iczoom.com，主题请标有“数据手册”字样。

Read Statement

1. The datasheets and other product information on the site are all from network reference or other public materials, and the copyright belongs to the original author and original published source. If readers and copyright owners have any objections, please contact us and we will deal with it in a timely manner.

2. The Chinese datasheets provided on the website is a Chinese translation of the English datasheets. Its purpose is for reader’s learning exchange only and do not involve commercial purposes. The translation cannot be automatically updated with the original manuscript, and there may also be improper translations. Readers are advised to use the English manuscript as a reference for more accurate information.

3. All product information provided on the website refer to solutions from manufacturers’ technical support or users the contents may have differences in description, and readers are advised to take the original article as the standard.

4. If you have any questions, please contact us at marketing@iczoom.com and mark the subject with “Datasheets”.

Downloaded from www.iczoom.com

Messrs. Digi-Key

Issue No. : PC-02-067
Date of issue : November 15, 2002
Classification : ■ New □ Change □ Renewal

Delivery Specification

Product Description	: Balun
Product Part Number	: EHF2BE2450
Classification of Spec	: Individual Product Specification
Applications	: Cellular phone For other applications, contact the undersigned in advance.
Term of Validity	: November 14, 2007 from the date of issue.

CUSTOMER USE ONLY	Receipt Record#:
This was certainly received by us. 1(one) copy is being returned to you.	Date of receipt:
	Received by: Title: Dept.:

Matsushita Electronic Components Co., Ltd.
Network Device Company
Module Strategic Business Unit
Engineering Group HFD Team
992-1 Aiba Ohno-cho Ibi-gun Gifu 501-0598 JAPAN
Tel: +81-0585-36-2322
Fax: +81-0585-36-2344

Prepared by	: H. Ito
Checked by	: M. Mizuno
Authorized by	: M. Mizuno
Title	: Manager of Engineering

[Shape, appearance, dimension] Unit: mm

<Top view> <Bottom and side view>

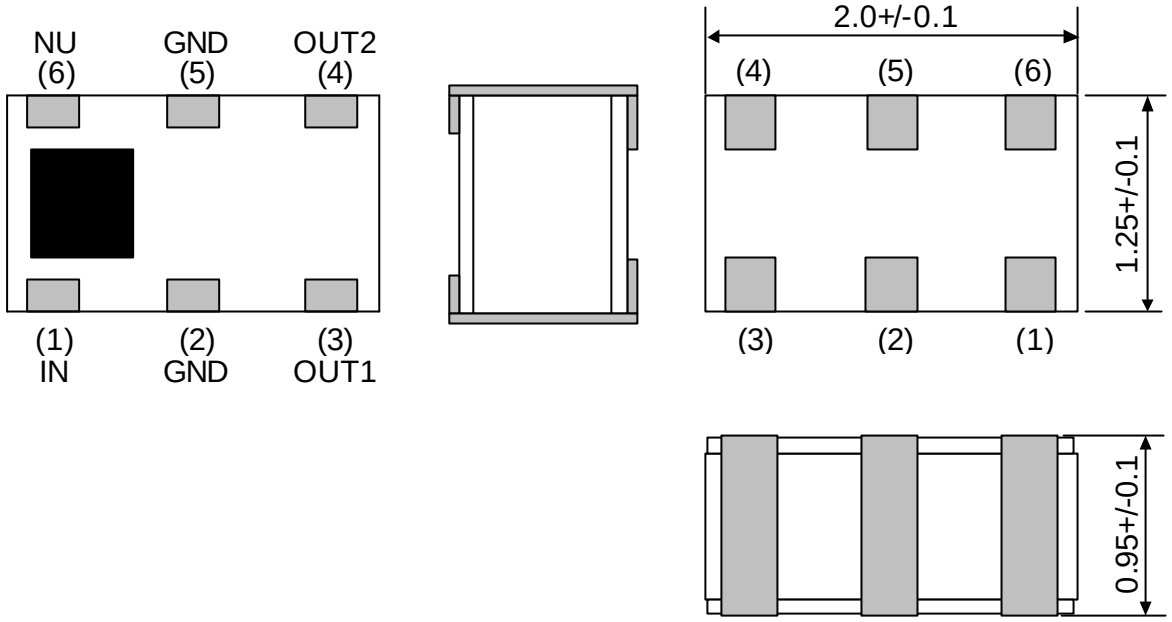

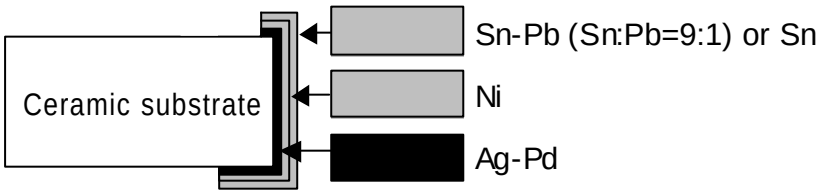

Note 1) “typ” is used where no dimensional tolerance applies.

Item	Description
Appearance/ construction	Product surface shall be covered with a protective film, which does not easily separate nor present noticeable unevenness, scratches, pinholes, color changes etc.
	Terminals shall ensure practically acceptable quality.
	Substrate shall be as shown in the drawing with no excessive chippings, scratches, burrs, or cracks.
Marking	Shall be legible in black (with printing paste).
Remarks	■ marked side for pin 1.

Balun		Delivery Specification			EHF2BE2450 Appearance
Enact. Date November 15, 2002	P.S.M	Approval	Check	Plan	
Enfo. Date November 15, 2002	-----	M. Mizuno	M. Mizuno	H. Ito	Drawing No. 151-EHF-2BE2450 9-1

[Absolute maximum ratings]

No.	Item	Symbol	Rating	Unit	Remarks
1	Maximum input power	Pmax	100	mW	DC voltage is 0V.
2	Operating temperature	Topr	-30…+85	degC	
3	Storage temperature	Tstg	-40…+85	degC	

Note: This component cannot apply a DC Bias.

[Electrical characteristics] T=-30…+85degC

No.	Item	Test Circuit	Specification			Unit
			Min.	Typ.	Max.	
1	Frequency	-	2400	-	2500	MHz
2	Insertion loss (Back to back)	Fig-2	-	-	1.0	dB
3	Unbalance impedance	-	-	50	-	ohm
4	Balance impedance	-	-	100	-	ohm
5	Unbalance port VSWR	Fig-1	-	-	2.0	-
6	Amplitude balance	Fig-1	-1.5	-	1.5	dB
7	Phase balance	Fig-1	165	180	195	deg

[Internal circuitry]

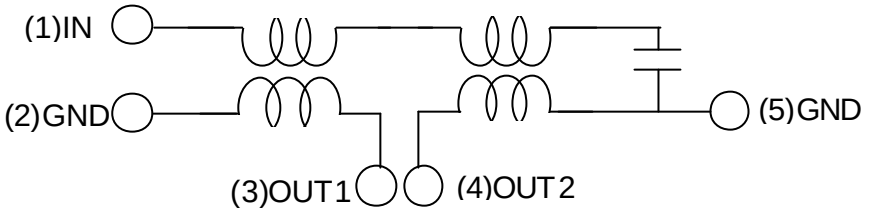

[Measuring circuit]

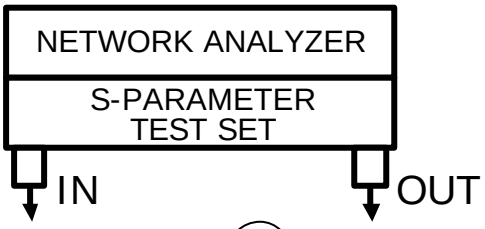

FIG.1

< Phase balance measurement >

•Phase1

A=IN, B=OUT, C=Terminal resistor (50 ohm)

•Phase2

A=IN, C=OUT, B=Terminal resistor (50 ohm)

•Phase balance

Phase balance=Phase1-Phase2

< Insertion loss measurement >

Assuming the loss as “Loss” when D=IN, E=OUT

Insertion loss for a device is “Loss”/2

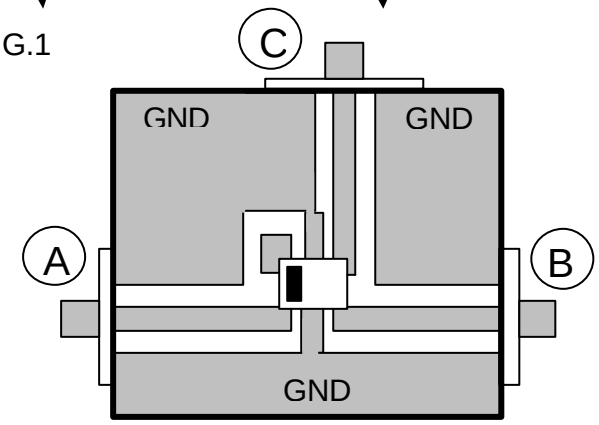

FIG.2

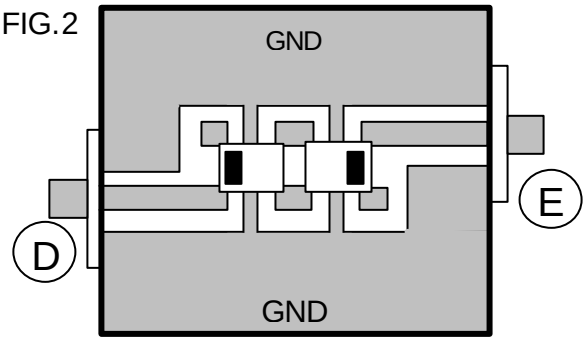

Balun	Delivery Specification				EHF2BE2450 Specification and measurement
Enact. Date November 15, 2002	P.S.M	Approval	Check	Plan	
Enfo. Date November 15, 2002	-----	M. Mizuno	M. Mizuno	H. Ito	Drawing No. 151-EHF-2BE2450 9-2

[Terminal dimensions] Unit: mm

<Bottom>

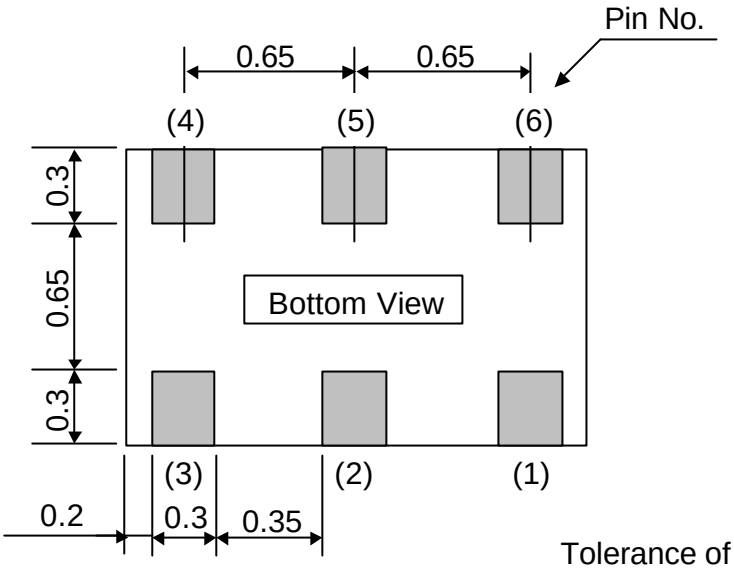

Tolerance of
Terminal dimensions: +/-0.15

[Recommended PCB pad dimensions] Unit: mm

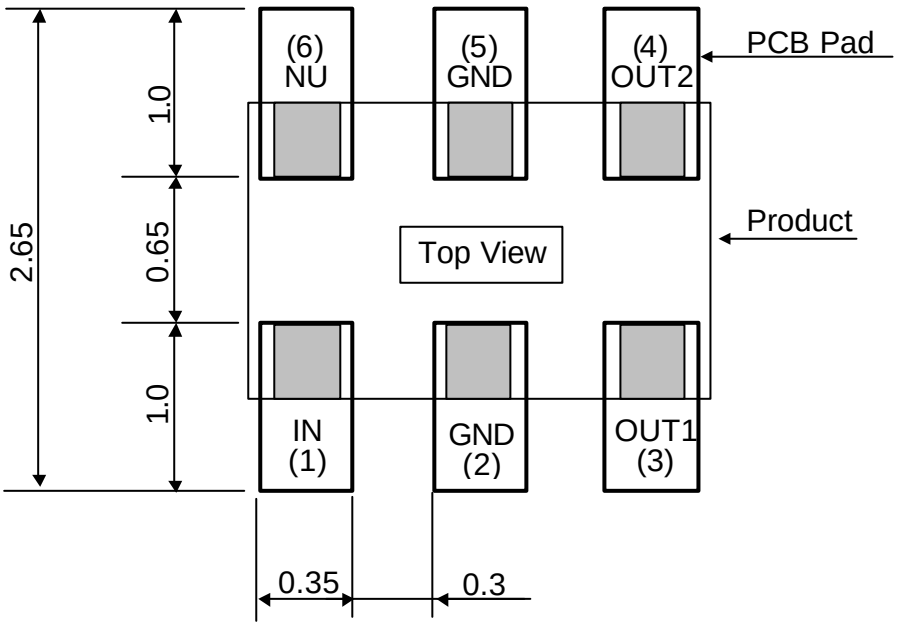

Balun			Delivery Specification		EHF2BE2450 Terminals/Recommended lands
Enact. Date November 15, 2002	P.S.M	Approval	Check	Plan	
Enfo. Date November 15, 2002	-----	M. Mizuno	M. Mizuno	H. Ito	Drawing No. 151-EHF-2BE2450 9-3

[Quality characteristics]

Test item	Test condition	Judgment criteria
High temperature	+85degC, 1000h	No abnormality shall be observed in appearance or electrical characteristics.
Low temperature	-40degC, 1000h	
High-temperature high-humidity storage	+60degC, 90%RH, 1000h	
Pressure Pot	+121degC, 99%RH, 2.026×10^5Pa, 100h	
Temperature cycling	-40…+85degC, Each 30 min., 200cy	
Vibration	10…500Hz, 10G, in each direction of XYZ, 2h30min.	
Impact	100G, 6mS, Half sinusoidal wave, in each direction of XYZ, 3 times	
Shock (Drop)	1.8m, 6 facesx6cy(36 times with 100g Dummy Load)	
Electro static discharge	200pF, 0 ohm, +/-200V, Each 5 times	
Soldering heat resistance	Manual hot gas: 260+/-10degC, 30 sec., 2 times	Over 90% of the terminal surface shall be covered with solder.
	Soldering iron: 260+/-10degC, 3 sec., 2 times	
	Reflow: 260degC peak, 2 times	
Solder ability	Solder bath: 235+/-5degC, 2 sec.	Over 95% of the terminal surface shall be covered with solder.
	Reflow: 230degC	
Board warping	Assemble this component on a PC board with 0.8mm thickness using the recommended soldering condition shown below, and apply a bending force of 3mm warping at a rate of 1mm/sec. 5 seconds and 5 times. 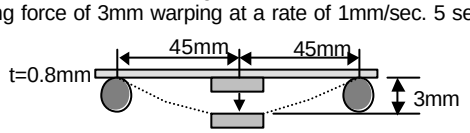	There should not be any cracks in the component or solder joints, no abnormality in electrical characteristics.
Terminal removal	Solder a component on a PC board using the recommended condition shown below and then press the component sideways at 1mm/sec. Destruction limit 9.8N or greater.	
Seating plane co-planarity	Within 0.1mm	

< Recommended soldering condition >

Diagram1 Shown below is a recommended reflow soldering condition.

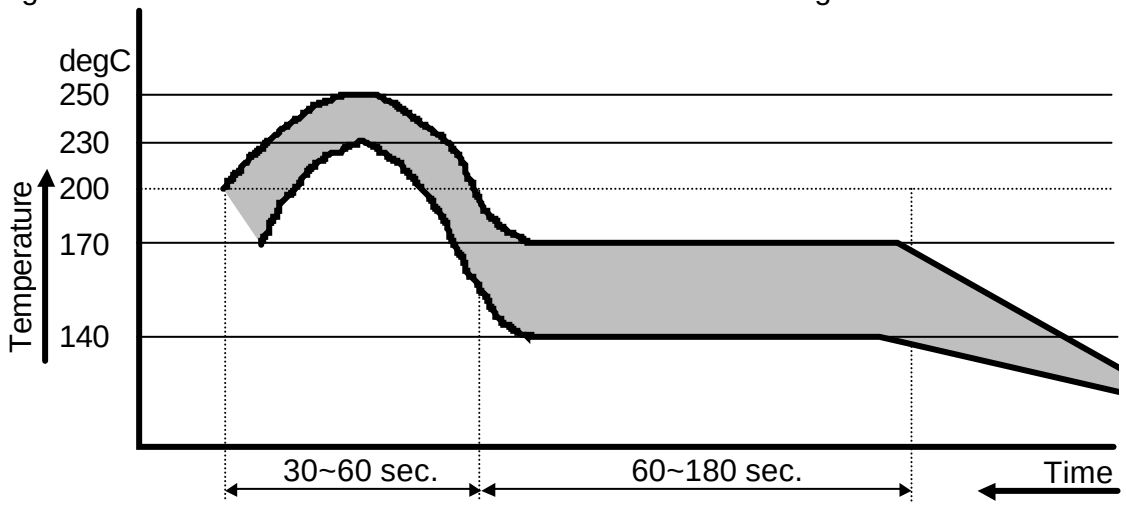

Balun			Delivery Specification			EHF2BE2450 Quality Characteristics
Enact. Date November 15, 2002	P.S.M	Approval	Check	Plan		
Enfo. Date November 15, 2002	-----	M. Mizuno	M. Mizuno	H. Ito		Drawing No. 151-EHF-2BE2450 9-4

[Cautions for use]

(1) Operating a product over the maximum rating for even a moment may result in a product failure or breakage. Never use a product in such a condition that it may cause a safety problem.

(2) Opening or short-circuiting the product terminals or inserting a product in the reverse orientation while power is being supplied may cause a breakage. Always avoid such circumstances.

(3) Operations in a corrosive gas atmosphere or improper environments such as high-temperature, high-humidity or dewy conditions may lead to product performance deterioration, a breakage, a change in appearance etc. Please avoid such conditions, as they are unsafe.

(4) Always ground the soldering iron or soldering bath used for assembly operation to avoid any excessive voltage applied to a product.

(5) After soldering with solder bridges, incomplete soldering or in the reverse orientation, supplying power may result in a product breakage. Please confirm the soldered condition before supplying power to the product.

(6) Excessive stress on the terminals may cause a contact failure or performance deterioration. Please use caution.

(7) Please provide a fail-safe provision in the product you design by taking any failure of our product into consideration.

(8) This product does not include a DC-cutting device. Application of a DC voltage between the Balance port and the Unbalance port may cause product deterioration or breakage.

* If any question arises about the safety of this product, please contact us immediately with a request for an engineering examination.

[Remarks]

*1: All of the materials used in this product are those listed as the existing chemical substances based on the “Law for examination and regulation of manufacture of chemical substances”.

*2: The production process of this product does not use any ozone-depleting chemicals (OZC) regulated by the Montreal Protocol.

*3: Validity of this specification is 5 years from the date of issue, but the validity is considered on going unless any changes are made.

[Packaging materials]

1. Materials
   1) Embossed carrier tape (Refer to the attachment)
   2) Top tape: Anti-static
   3) Packaging box (Refer to the attachment)
   4) Packaging tape, carrier-securing adhesive tape
2. Specification

No.	Item	Condition	Remarks
1	Reel outer diameter	Refer to the attachment.	
2	Reel inner diameter	Refer to the attachment.	
3	Reel inner width	Refer to the attachment.	
4	Quantity in a reel	4000 pieces/reel	
5	Taping direction	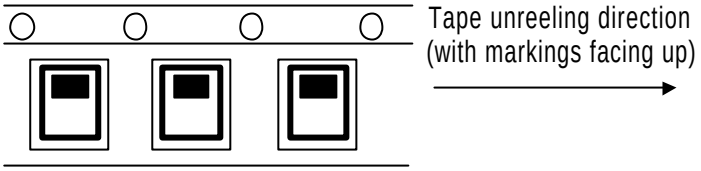	
6	Top tape attachment position	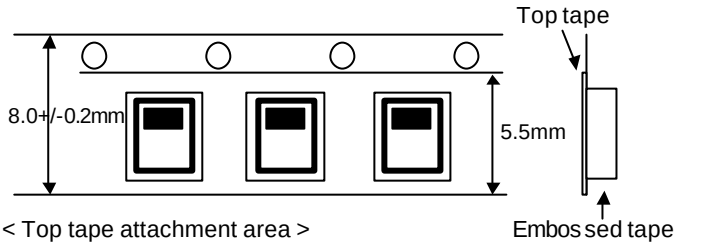 Top tape edge must stay inside the sprocket holes of the embossed carrier (Sprocket holes shall not be covered).	Tape breaks force. Min. 10N Top cover tape strength. Min. 10N Tape peel force. 0.1…1.0N Tape peel angle. 165…180degree Reel weight. Max 1500g
7	Label attachment position		Indicated Item Pat No., Lot No. Quantity, Maker Country of Origin
8	Tape leader part and tape ending part	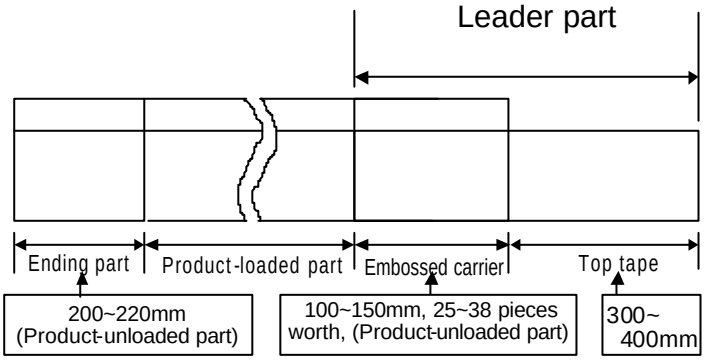	
9	Missing products	No missing products shall be allowed.	
10	Packaged quantity in a box	21 reels/box (Max)	84000 pieces/box(Max)

Balun	Delivery Specification				EHF2BE2450 Packaging specification 1
Enact. Date November 15, 2002	P.S.M	Approval	Check	Plan	
Enfo. Date November 15, 2002	-----	M. Mizuno	M. Mizuno	H. Ito	Drawing No. 151-EHF-2BE2450 9-6

1. Method

1) Load products in each cavity of an embossed carrier tape, in the correct orientation, by leaving the product-unloaded part shown in Item No. 8(P9-6) of the packaging specification.

2) Heat-seal a top tape in good alignment on the carrier tape.

3) After 4000 pieces are loaded and reeled, provide a product-unloaded part at the tape-leader portion. Secure the tip of the carrier tape with a piece of adhesive tape.

4) Stack the reels (21 reels max.) and enclose them in a packaging box. Close the flaps with a piece of adhesive tape.

5) Provide markings on the packaging box.

< Items to be indicated >

1. Part No.
2. Quantity
3. Lot No.
4. Manufacturer name
5. Country of origin

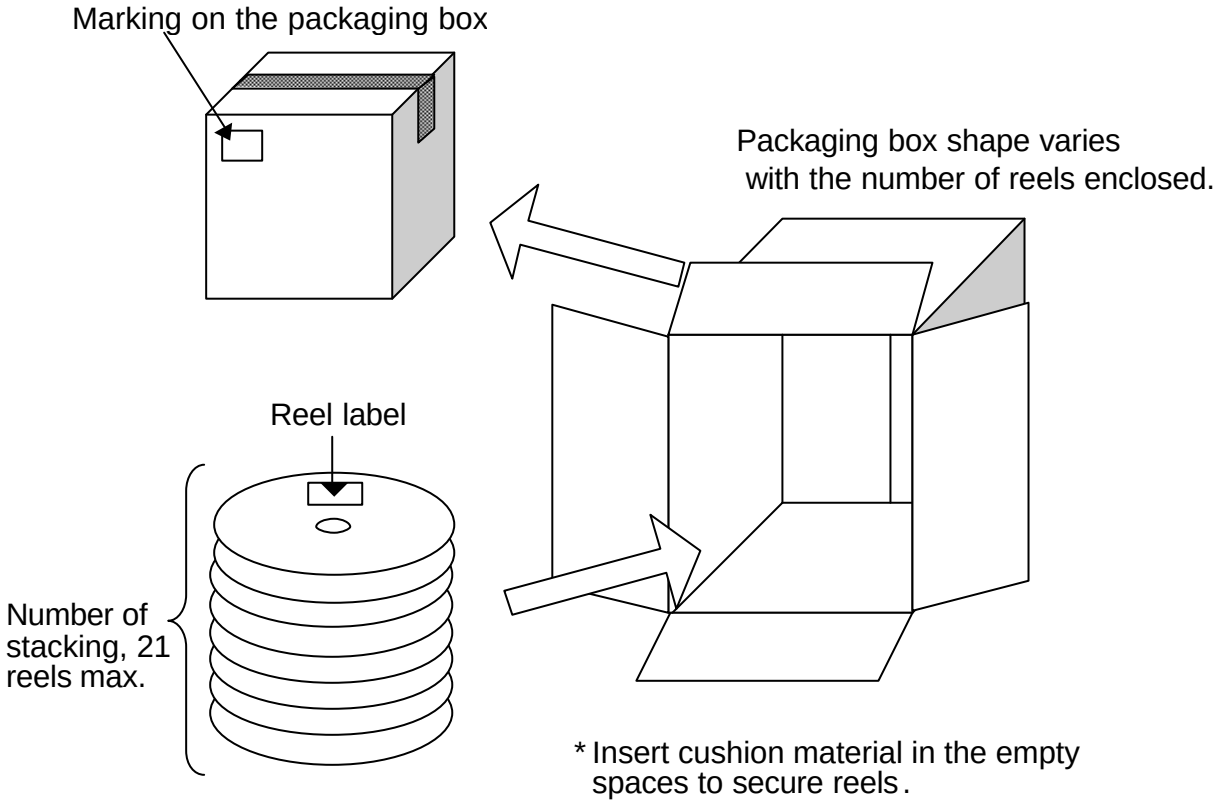

Balun		Delivery Specification				EHF2BE2450 Packaging specification 2
Enact. Date November 15, 2002	P.S.M	Approval	Check	Plan		
Enfo. Date November 15, 2002	-----	M. Mizuno	M. Mizuno	H. Ito		Drawing No. 151-EHF-2BE2450 9-7

[Embossed tape dimensions] Unit: mm

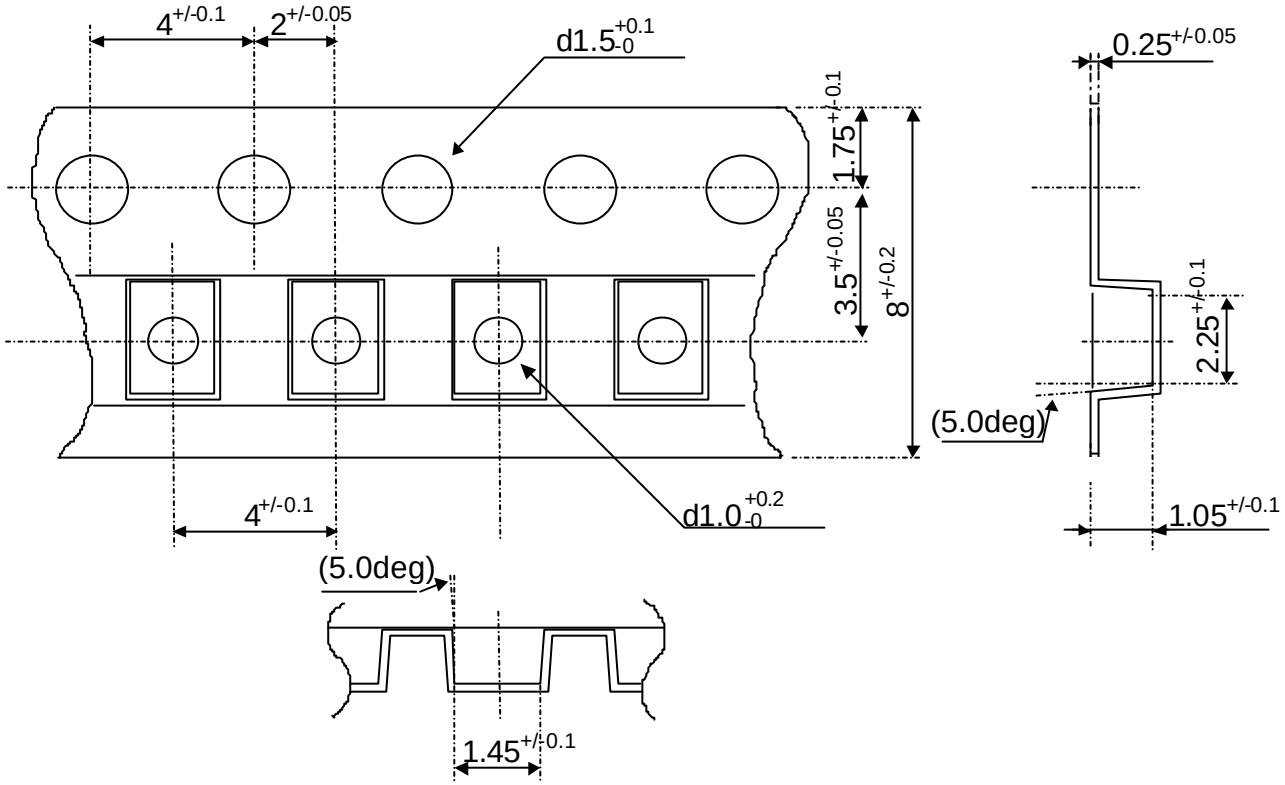

<Remarks>

(1) Unspecified corner radius shall be 0.3mm max.

(2) Cumulative pitch error of sprocket holes shall be +/-0.2mm for 10 pitches.

Balun		Delivery Specification				EHF2BE2450 Packaging specification 3
Enact. Date November 15, 2002	P.S.M	Approval	Check	Plan		
Enfo. Date November 15, 2002	-----	M. Mizuno	M. Mizuno	H. Ito		Drawing No. 151-EHF-2BE2450 9-8

[Reel dimensions] Unit: mm

(1) This reel conforms to EIAJ-RRM-08B based on EIAJ standard.

(2) Material: PS (Polystyrene)

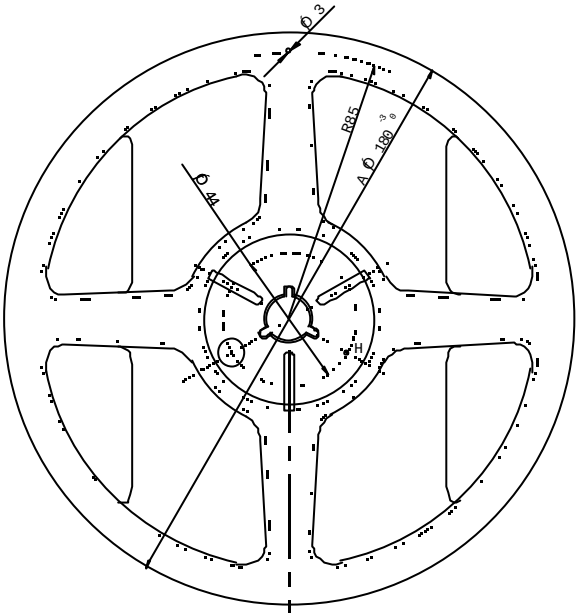

Center area

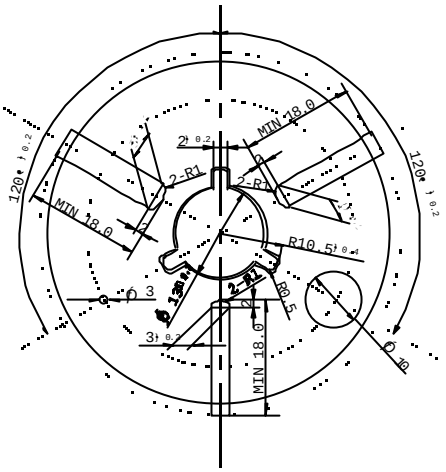

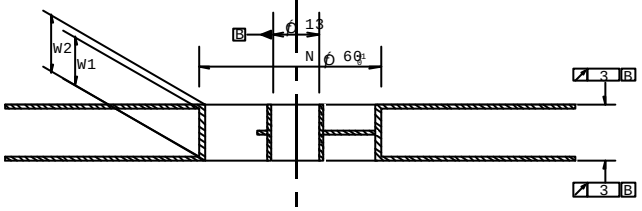

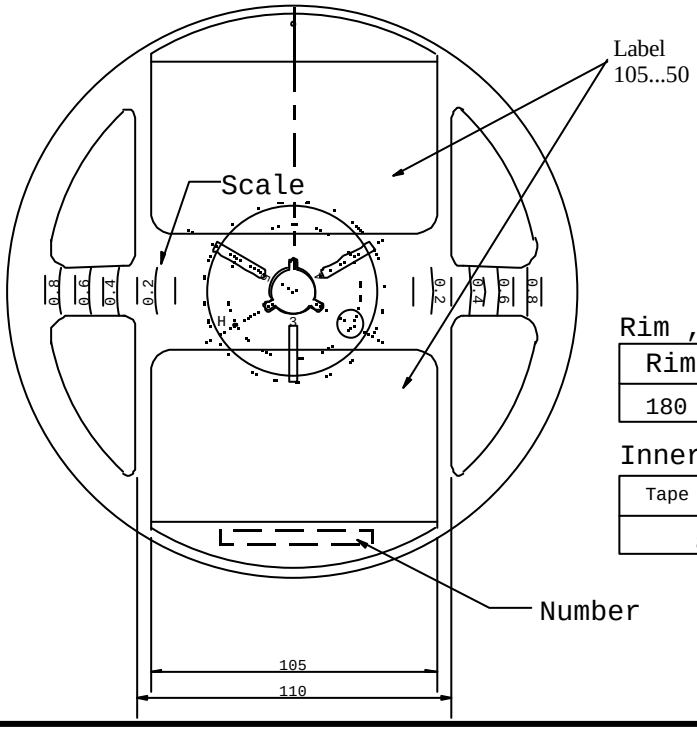

Rim , Hub

Rim A	Hub N
180^{0}_{-3}	60^{+1}_{0}

Inner width , Outer width

Tape width	Inner width W1	Outer width W2
8	9+/-0.3	11+/-1.0

Balun	Delivery Specification				EHF2BE2450 Packaging specification 4
Enact. Date November 15, 2002	P.S.M	Approval	Check	Plan	
Enfo. Date November 15, 2002	-----	M. Mizuno	M. Mizuno	H. Ito	Drawing No. 151-EHF-2BE2450 9-9