阅读申明

1.本站收集的数据手册和产品资料都来自互联网，版权归原作者所有。如读者和版权方有任何异议请及时告之，我们将妥善解决。
2.本站提供的中文数据手册是英文数据手册的中文翻译，其目的是协助用户阅读，该译文无法自动跟随原稿更新，同时也可能存在翻译上的不当。建议读者以英文原稿为参考以便获得更精准的信息。
3.本站提供的产品资料，来自厂商的技术支持或者使用者的心得体会等，其内容可能存在描叙上的差异，建议读者做出适当判断。
4.如需与我们联系，请发邮件到marketing@iczoom.com，主题请标有“数据手册”字样。

Read Statement

1. The datasheets and other product information on the site are all from network reference or other public materials, and the copyright belongs to the original author and original published source. If readers and copyright owners have any objections, please contact us and we will deal with it in a timely manner.

2. The Chinese datasheets provided on the website is a Chinese translation of the English datasheets. Its purpose is for reader’s learning exchange only and do not involve commercial purposes. The translation cannot be automatically updated with the original manuscript, and there may also be improper translations. Readers are advised to use the English manuscript as a reference for more accurate information.

3. All product information provided on the website refer to solutions from manufacturers’ technical support or users the contents may have differences in description, and readers are advised to take the original article as the standard.

4. If you have any questions, please contact us at marketing@iczoom.com and mark the subject with “Datasheets”.

Downloaded from www.iczoom.com

AEDM-5xxx

Quick Assembly High Resolution Three Channel Optical Encoders

Data Sheet

Description

Avago Technologies' AEDM-5xxx series encoders are high resolution and high performance three channel optical incremental encoders. These encoders emphasize on high reliability, high resolution, and easy assembly.

Each encoder contains a LED source with lens, an ASIC with integrated photo detector arrays, LED current regulation, interpolator and output driver circuitry, and a code wheel which rotates between the emitter and detector ASIC. The outputs of the AEDM-5xxx are two square waves in quadrature. In addition, a third channel offers index signal, which is a 90 electrical degree, true index pulse which is generated once for each full rotation of the code wheel. The AEDM-5xxx series utilizes a film code wheel allowing for resolutions up to 5000 CPR.

These bearing-less housed encoders may be quickly and easily mounted to a motor. For larger diameter motors, the AEDM-59xx series feature external mounting ears option.

The quadrature signals and the index pulse are accessed through five 0.025 inch square pins located on 0.1 inch centers.

Standard resolutions between 2000 and 5000 counts per revolution are presently available. Consult local Avago sales representatives for other resolutions.

Features

- Two channel quadrature output with index pulse
- High Resolution - up to 5000 CPR
- Operating temperature – 40°C to +85°C
- Quick and easy assembly
- No signal adjustment required
- Cost Effective solution
- Small size
- TTL compatible output
- Single 5V supply with ±10% tolerance
- External mounting ears option available for larger motors.

Note: Avago Technologies encoders are not recommended for use in safety critical applications such as. ABS braking systems, power steering, life support systems and critical care medical equipment. Please contact our sales representative if clarifications are needed.

CAUTION: *It is advised that normal static precautions be taken in handling and assembly of this component to prevent damage and/or degradation which may be induced by ESD.*

Package dimensions

AEDM-58xx

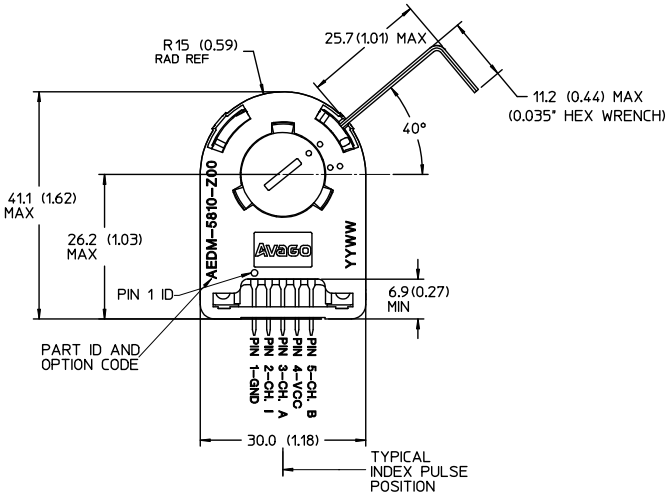

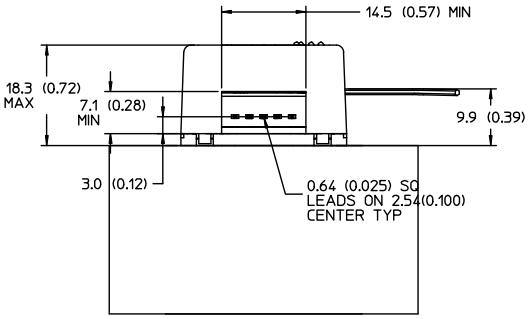

NOTES:
1. LEAVE CLEARANCE FOR TURNING AND REMOVING THE HEX WRENCH.
2. TYPICAL DIMENSIONS IN MILLIMETERS (INCHES).

*Note: For the AEDM-58XX Pin #2 is CH. I, the index output.

AEDM-59xx

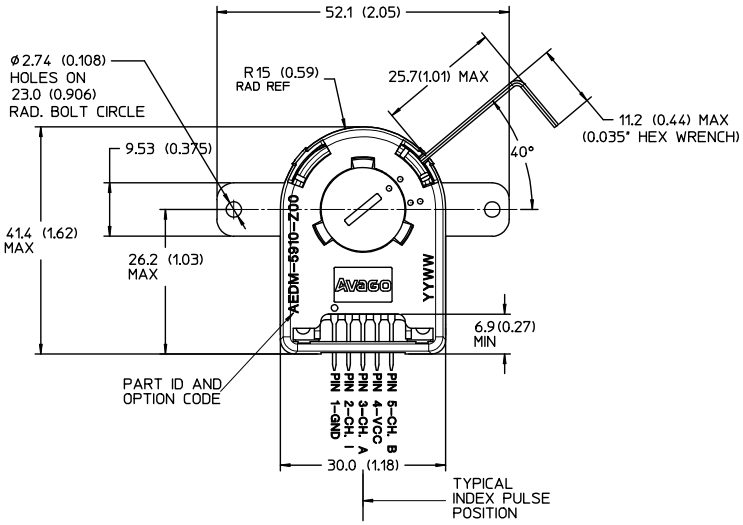

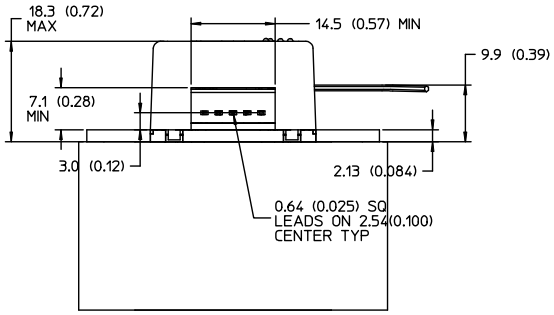

NOTES:
1. LEAVE CLEARANCE FOR TURNING AND REMOVING THE HEX WRENCH.
2. TYPICAL DIMENSIONS IN MILLIMETERS (INCHES).

*Note: For the AEDM-59XX Pin #2 is CH. I, the index output.

Absolute Maximum Ratings

Parameter	Symbol	Minimum	Maximum	Units
Storage Temperature	T_s	-40	+85	°C
Operating Temperature	T_A	-40	+85	°C
Supply Voltage	V_{CC}	-0.5	7	V
Output Voltage	V_O	-0.5	Vcc	V
Output Current per Channel	I_{OUT}		±5	mA
Velocity			12,000**	RPM

Note **: Velocity 12000 RPM applies to Encoder Resolution of 5000 CPR

Recommended Operating Conditions

Parameter	Symbol	Min.	Typ.	Max.	Units	Notes
Temperature	T_A	-40		+85	°C	
Supply Voltage	V_{CC}	4.5	5.0	5.5	Volt	Ripple < 100 mVp-p
Load Capacitance	C_L			100	pF	
Output Frequency	f			500	kHz	2000 – 2500 CPR
				1,000	kHz	4000 – 5000 CPR
Shaft Perpendicularity Plus Axial Displacement				± 0.15 (± 0.006)	mm (in.)	
Spatial play (including shaft eccentricity)				Ø0.40 (0.016)	mm (in.)	

Encoding Characteristics

Encoding characteristics are applicable per the Recommended Operating Conditions, unless otherwise specified. Values are for the worst case error over the full rotation.

Encoder Resolution ≥ 4000 CPR

Parameter	Symbol	Min	Typ.*	Max	Units
Pulse Width Error	ΔP		21	45	°e
Logic State Width Error	ΔS		17	45	°e
Phase Error	Δϕ		12	25	°e
Cycle Error	ΔC		36	60	°e
Index Pulse Width	P_0	65	90	115	°e

Encoder Resolution ≤ 2500 CPR

Parameter	Symbol	Min	Typ.*	Max	Units
Pulse Width Error	ΔP		20	30	°e
Logic State Width Error	ΔS		15	25	°e
Phase Error	Δϕ		10	15	°e
Cycle Error	ΔC		17	30	°e
Index Pulse Width	P_0	72	90	108	°e

* Typical values specified at V_{CC} = 5.0V and 25°C and for single ended, unless otherwise stated

Electrical Characteristics

Electrical Characteristics over Recommended Operating Range

Parameter	Symbol	Min.	Typ.*	Max.	Units	Notes
Supply Current	I_{CC}		25	80	mA	No load
High Level Output Voltage	V_{OH}	2.4			V	I_{OH} = -5 mA
Low Level Output Voltage	V_{OL}			0.4	V	I_{OL} = 5 mA.
Rise Time	t_r		10		ns	C_L = 100 pF
Fall Time	t_f		10		ns	C_L = 100 pF

*Typical values specified at V_{CC} = 5.0 V and 25°C.

Mechanical Characteristics

Parameter	Symbol	Dimension	Tolerance [1]	Units
Codewheel Fits These Standard Shaft Diameters		2, 3, 4 5, 6, 8	+0.000 -0.015	mm
		5/32, 1/8 3/16, 1/4	+0.0000 -0.0007	in
Moment of Inertia	J	0.6 (8.0 x 10-6)		g-cm2 (oz-in-s2)
Required Shaft Length [2]		14.0 (0.55)	± 0.5 (± 0.02)	mm (in.)
Bolt Circle [3]	2 screw mounting	19.05 (0.750)	± 0.13 (± 0.005)	mm (in.)
	3 screw mounting	20.90 (0.823)	± 0.13 (± 0.005)	mm (in.)
	external mounting ears	46.0 (1.811)	± 0.13 (± 0.005)	mm (in.)
Mounting Screw Size [4]	2 screw mounting	M 2.5 or (2-56)		mm (in.)
	3 screw mounting	M 1.6 or (0-80)		mm (in.)
	external mounting ears	M 2.5 or (2-56)		mm (in.)
Encoder Base Plate Thickness		0.33 (0.130)		mm (in.)
Hub Set Screw		(2-56)		(in.)

Notes:
1. These are tolerances required of the user.
2. The AEDM-5805, 5905 provide an 8.9 mm (0.35 inch) diameter hole through the housing for longer motor shafts. See Ordering Information.
3. The recommended mounting screw torque for 2 screw and external ear mounting is 1.0 kg-cm (0.88 in-lbs). The recommended mounting screw torque for 3 screw mounting is 0.50 kg-cm (0.43 in-lbs).

Output Waveforms

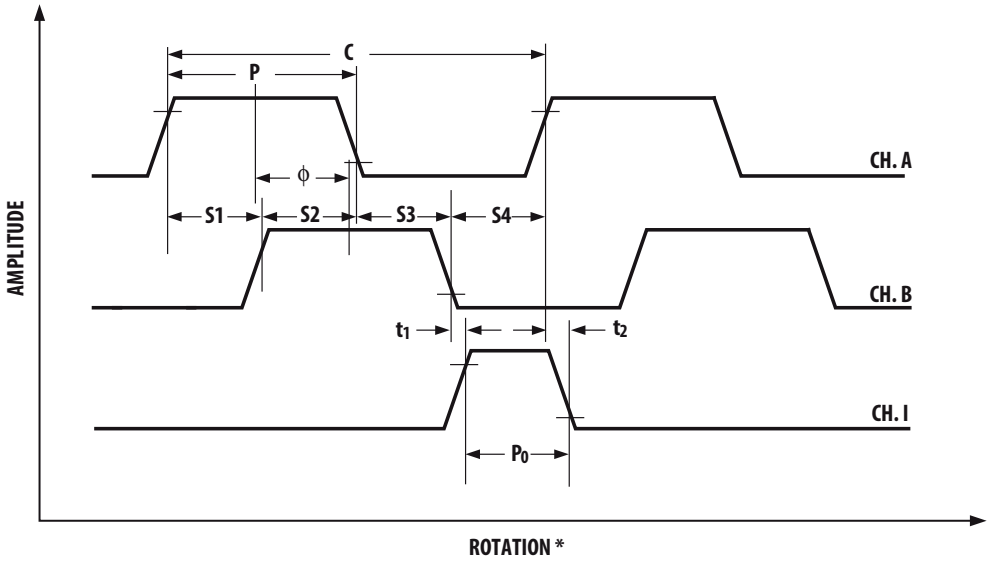

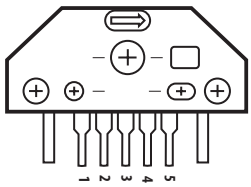

*** SPIN DIRECTION FOLLOWS ARROW MARKING ON ENCODER**

Direction of Rotation: When the codewheel rotates in the counter-clockwise direction (as viewed from the encoder end of the motor), channel A will lead channel B. If the codewheel rotates in the clockwise direction, channel B will lead channel A.

Mounting Considerations

The AEDM-5xxx Series high resolution encoders must be aligned using the aligning pins as specified in Figure 2, or using the HEDS-8910 Alignment Tool as shown in Encoder Mounting and Assembly.

The AEDM-58xx can be mounted to a motor using either the two screw or three screw mounting option as shown in Figure 1. The optional aligning pins shown in Figure 2 can be used with either mounting option

The AEDM-59xx have external mounting ears which may be used for mounting to larger motor base plates. Figure 3 shows the necessary mounting holes with optional aligning pins and motor boss.

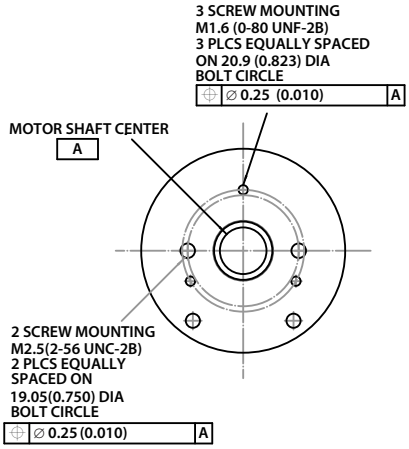

Figure 1. Mounting Holes

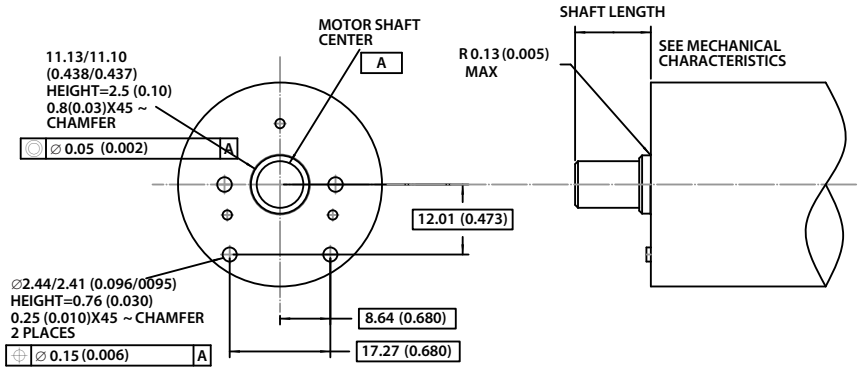

Figure 2. Optional Mounting Aids

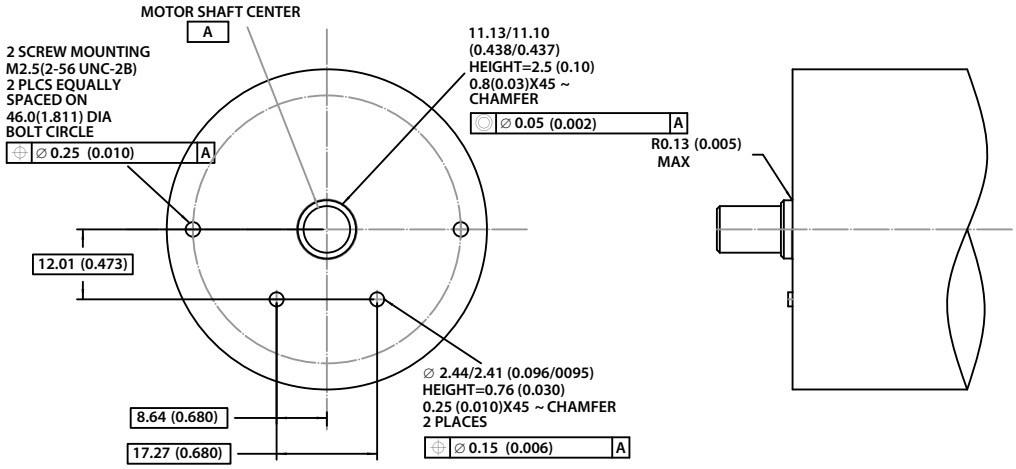

Figure 3. Mounting with external ears

Index Pulse Width (PO): The number of electrical degrees that an index output is high during one full shaft rotation. This value is nominally 90°e or 1/4 cycle.

Encoder Mounting and Assembly

Assembly process for AEDM-58xx and AEDM-59xx

1. Slide the alignment tool onto the motor shaft. With alignment tool in place, mount encoder baseplate onto motor as shown above. Ensure that the holes in the baseplate align with the mounting holes in the motor body. Inset and tighten mounting screws* and remove alignment tool.
2. Snap encoder body onto base plate locking all 4 snaps.

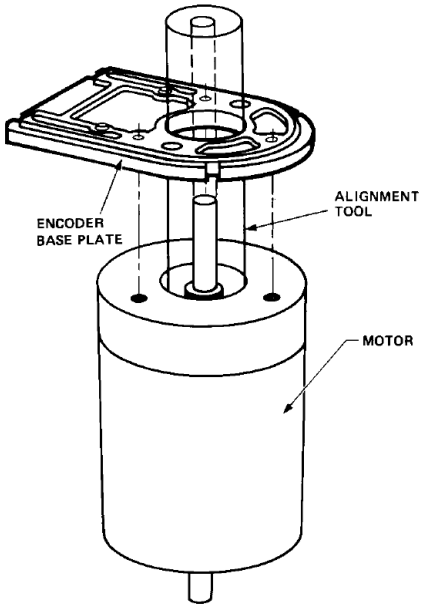

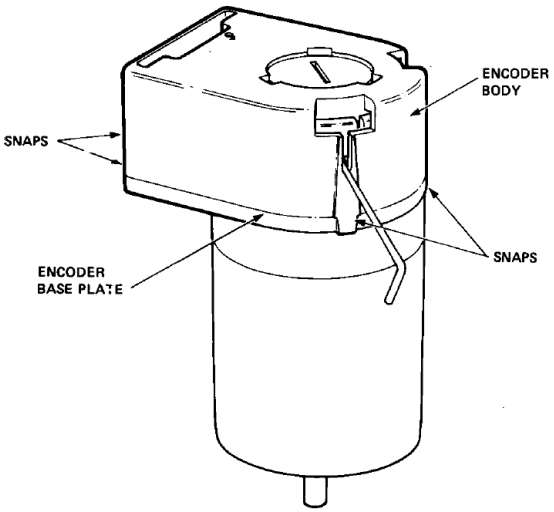

3a. Inset the hex wrench into the body of the encoder. Ensure that it is properly seated into the code wheel hub set screws. Then apply a downward force on the end of the hex wrench. This sets the code wheel gap by levering the code wheel hub to its upper position.

3b. While continuing to apply a downward force, rotate the hex wrench in the clockwise direction until the hub set screw is tight** against the motor shaft. The hub set screw attaches the code wheel to the motor's shaft.

3c. Remove the hex wrench by pulling it straight out of the encoder body.

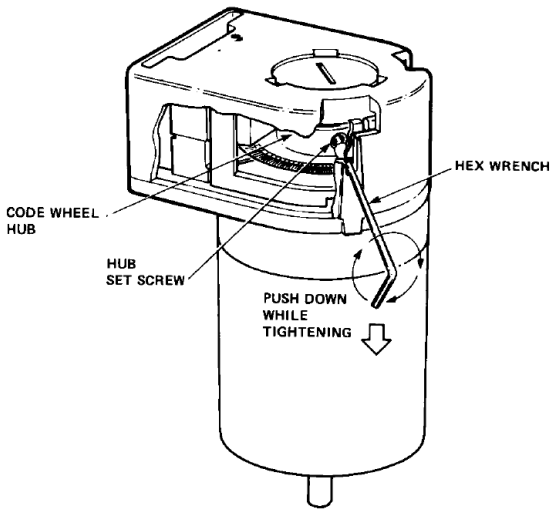

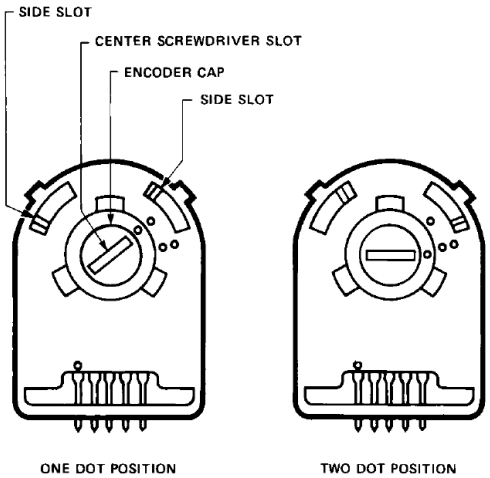

4. Use the center screwdriver slot, or either of the two side slots, to rotate the encoder cap dot clockwise from the one dot position to the two dot position. Do not rotate the encoder cap counterclockwise beyond the one dot position. The encoder is ready for use!

* Adhesive should applied to the screw-baseplate interface to prevent screws loosening due to effect of vibration and high temperature on plastic. High temperature rated adhesive such as Hernon Ultra 317 is recommended.

** The recommended torque to tighten the setscrew is 15-18 ozf.inch.

Connectors

HEDS-890x connector dimensions

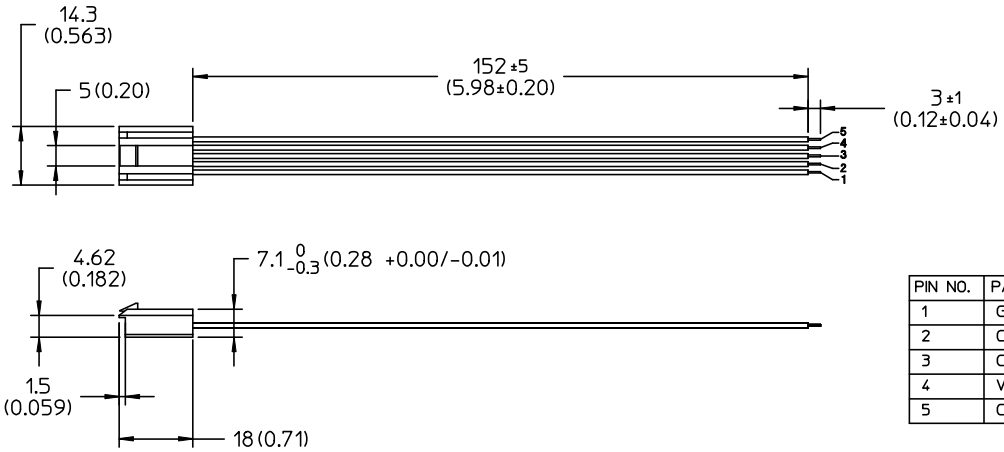

PIN NO.	PARAMETER	COLORS
1	GROUND	BLACK
2	CH. I	BLUE
3	CH. A	WHITE
4	Vcc	RED
5	CH. B	BROWN

Figure 4. HEDS-8902 and HEDS-8903 Connectors

Connectors

Manufacturer	Part Number
AMP	103686-4
	640442-5
Avago *	HEDS-8902 (2 ch.) with 4-wire leads
	HEDS-8903 (3 ch.) with 5-wire leads
Molex	2695 series with 2759 series term.

* Avago connectors are designed to mechanically lock into the AEDM-5XXX Series.

Ordering Information

Encoders with Film Code wheels

A	E	D	X	-	5	X	1	X	-	X	Y	Y

Code Wheel

M	Mylar CW
L	Line Driver

Mounting Type

8	Standard
9	External Ear Mounting

Through Hole

0	None
5	8.9mm (0.35 inch)

Resolution (CPR)

B	1000
J	1024
L	1250
T	2000
U	2048
W	2500
N	4000
R	4096
Z	5000

Shaft Diameter

01	2mm
02	3mm
03	1/8 in.
04	5/32 in.
05	3/16 in.
06	1/4 in.
11	4mm
12	6mm
13	8mm
14	5mm

DISCLAIMER: *Avago's products and software are not specifically designed, manufactured or authorized for sale as parts, components or assemblies for the planning, construction, maintenance or direct operation of a nuclear facility or for use in medical devices or applications. Customer is solely responsible, and waives all rights to make claims against Avago or its suppliers, for all loss, damage, expense or liability in connection with such use.*

For product information and a complete list of distributors, please go to our web site: **www.avagotech.com**

Avago, Avago Technologies, and the A logo are trademarks of Avago Technologies in the United States and other countries.
Data subject to change. Copyright © 2005-2015 Avago Technologies. All rights reserved.
AV02-4926EN - June 4, 2015