阅读申明

1.本站收集的数据手册和产品资料都来自互联网，版权归原作者所有。如读者和版权方有任何异议请及时告之，我们将妥善解决。
2.本站提供的中文数据手册是英文数据手册的中文翻译，其目的是协助用户阅读，该译文无法自动跟随原稿更新，同时也可能存在翻译上的不当。建议读者以英文原稿为参考以便获得更精准的信息。
3.本站提供的产品资料，来自厂商的技术支持或者使用者的心得体会等，其内容可能存在描叙上的差异，建议读者做出适当判断。
4.如需与我们联系，请发邮件到marketing@iczoom.com，主题请标有“数据手册”字样。

Read Statement

1. The datasheets and other product information on the site are all from network reference or other public materials, and the copyright belongs to the original author and original published source. If readers and copyright owners have any objections, please contact us and we will deal with it in a timely manner.

2. The Chinese datasheets provided on the website is a Chinese translation of the English datasheets. Its purpose is for reader’s learning exchange only and do not involve commercial purposes. The translation cannot be automatically updated with the original manuscript, and there may also be improper translations. Readers are advised to use the English manuscript as a reference for more accurate information.

3. All product information provided on the website refer to solutions from manufacturers’ technical support or users the contents may have differences in description, and readers are advised to take the original article as the standard.

4. If you have any questions, please contact us at marketing@iczoom.com and mark the subject with “Datasheets”.

Downloaded from www.iczoom.com

AIRPAX®

JAE Series
Magnetic Circuit Protectors

Introduction • 205
Poles • 207
Configurations • 211
Operating Characteristics • 213
Delay Curves • 216
Decision Tables • 217

AIRPAX® | JAE/JRE/JLE Series

Hydraulic Magnetic Circuit Protectors

INTRODUCTION

In today's applications, ambient operating temperatures present circuit protection challenges for many design engineers. High current thermal protective devices may not provide the desired degree of protection. The JAE/JRE/JLE series magnetic-hydraulic circuit protector addresses this issue by providing circuit protection for high current applications with a consistent trip point over temperatures ranging from –40°C to +85°C.

The JAE/JRE/JLE series is actually a family of circuit protectors available in one to six pole assemblies with a variety of configurations and terminal styles. The principle member of this family is the JLE, an F-frame "listed circuit breaker" which complies with conditions of UL-489. Other members of the family include the JTE, for telecommunication applications and complies to UL-489A, and the JAE, a special construction version. In addition, the JAE is now in compliance with the standards used in Australia and New Zealand, AS 60947.2-2005 (equivalent to IEC 60947-2:2006+A1).

The JAE/JRE/JLE series magnetic-hydraulic circuit protector provides circuit protection for high current applications. It provides a consistent trip point over temperatures ranging from –40°C to +85°C.

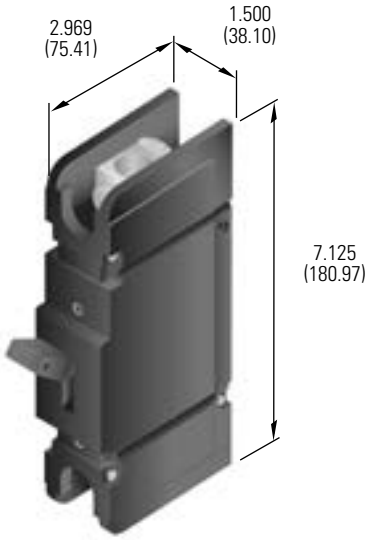

General Description

- mid-trip handle available for visual identification of fault-tripped circuit breakers
- optional internal low voltage shunt to meter current (single and multi-pole units are dimensionally equivalent in depth)
- terminal options for design flexibility in various applications
- multiple trip time delays for application flexibility
- electrical and mechanical actuated auxiliary switch options for external monitoring of circuits
- reduced voltage drop through the circuit breaker vs. other circuit protective devices

Number of Poles

- 1, 2, 3, 4, 5, 6

Current and Voltage Ratings

- 100 to 250 amps, 160Vdc
- 100 to 250 amps, 125/250Vdc
- 100 to 250 amps, 65Vdc
- 275 to 800 amps, 160Vdc (paralleled poles)
- 275 to 1200 amps, 65Vdc (paralleled poles)

Interrupting Capacity

- 10,000 amps, 160Vdc
- 10,000 amps, 125/250Vdc
- 100,000 amps, 65Vdc (1 amps to 800 amps)
- 10,000 amps, 160Vdc (ratings ≤1000 amps)
- 65,000 amps, 65Vdc (801 amps to 1200 amps)

Approvals

- UL 489 Listed
- UL 489A Listed
- CSA Certified
- CUL/CUR Certified
- TUV Certified
- CCC Certified
- AS 60947.2-2005 (equivalent to IEC 60947-2:2006+A1)

Single-pole ratings: UL489, 250 amps max at 160 Vdc, 10,000 amp interrupting capacity and 250 amps max at 65 Vdc, 65,000 amp interrupting capacity. Multi-pole ratings: UL 489A, 800 amps max at 160 Vdc, 10,000 amp interrupting capacity and 1,200 amps max at 65 Vdc, 65,000 amp interrupting capacity.

ISO-9001 Certified

Optional Metering Shunt

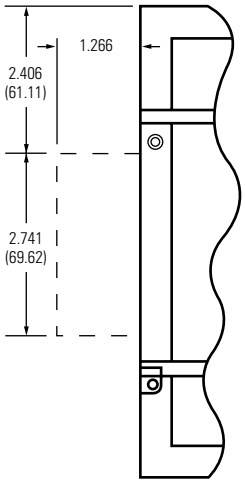

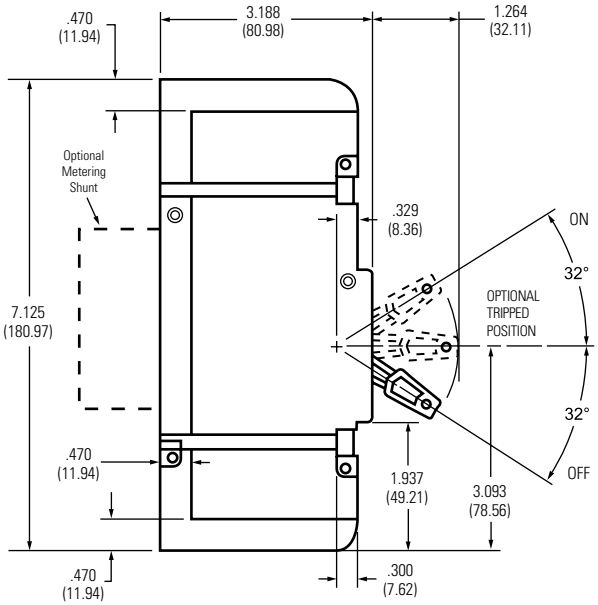

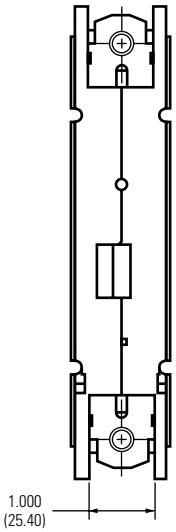

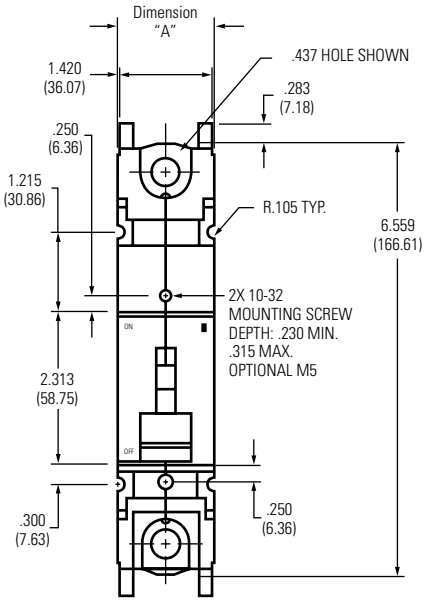

Terminal Configuration

Captive Nut (-F1)

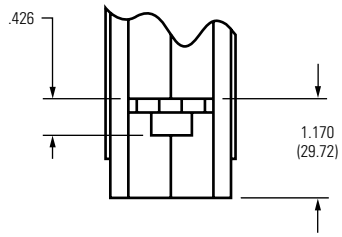

Stud (-B3)

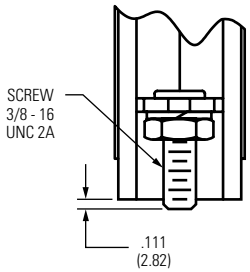

Long Stud (-B4)

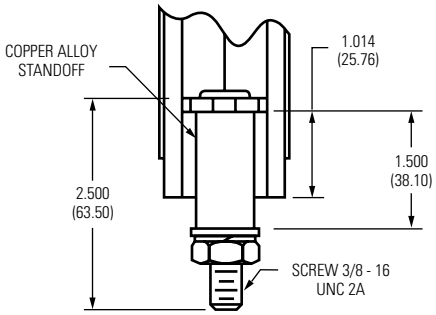

Solderless Connector (-F0)

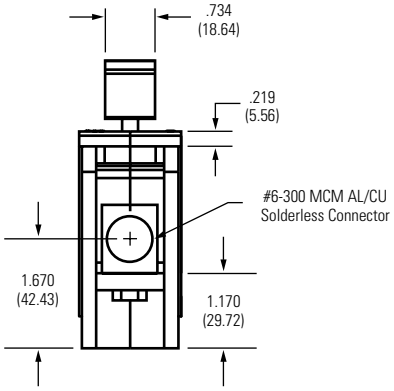

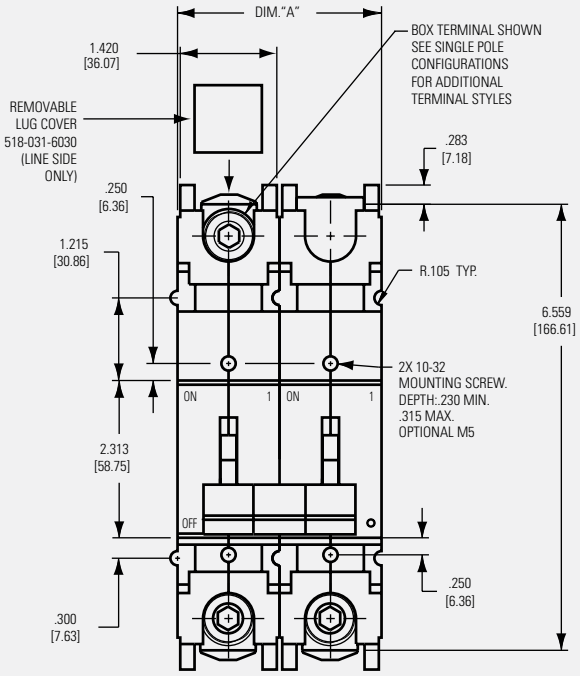

MULTI-POLE DIMENSIONS	
Number of Poles	Dimension "A"
1	1.500 [38.10] Max
2	3.000 [76.20] Max
3	4.500 [114.30] Max
4	6.000 [152.40] Max
5	7.500 [190.50] Max
6	9.000 [228.60] Max

PARALLEL MULTI-POLE ASSEMBLIES			
Amp Range	Number of Poles	Dimension "A"	Dimension "B"
275 to 400	2	2.375 [60.33] Max	3.000 [76.20] Max
450 to 600	3	3.875 [98.43] Max	4.500 [114.30] Max
650 to 800	4	5.375 [136.53] Max	6.000 [152.40] Max
850 to 1000	5	6.875 [174.63] Max	7.500 [190.50] Max
1050 to 1200	6	8.375 [212.73] Max	9.000 [228.60] Max
Note: Tolerance of ± 0.030 [0.762]			

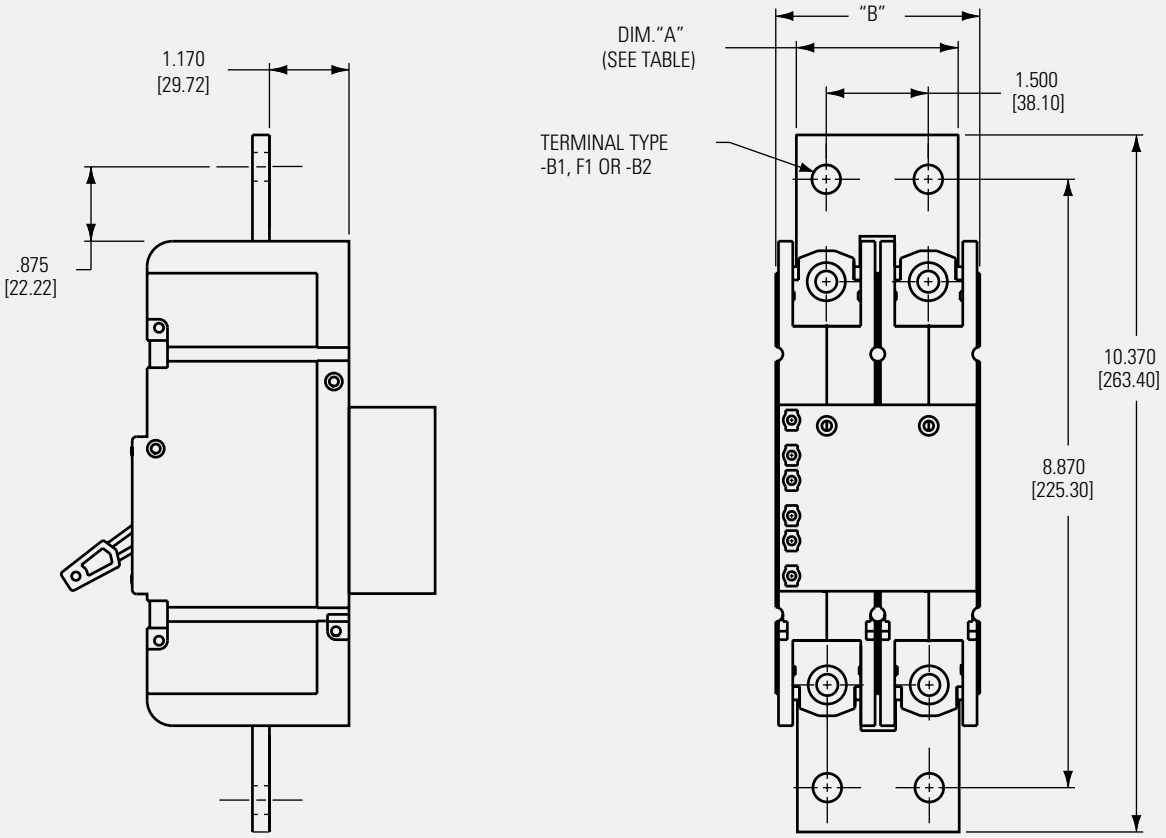

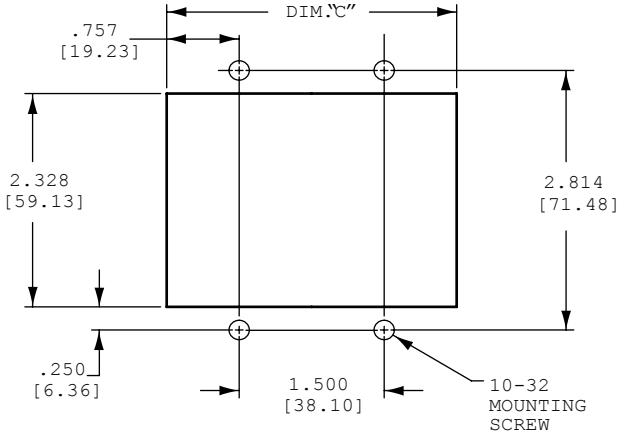

PANEL MOUNTING DETAILS	
Number of Poles	Dimension "C"
1	1.515 [38.48] Max
2	3.015 [76.58] Max
3	4.515 [114.68] Max
4	6.015 [152.78] Max
5	7.515 [190.88] Max
6	9.015 [228.98] Max

Notes:
1. All mounting inserts shall be utilized when panel mounting circuit breakers. Panel mounting screws shall have recommended torque applied.
2. Panel mounting screws shall not extend beyond back of mounting panel more than specified mounting insert depth.

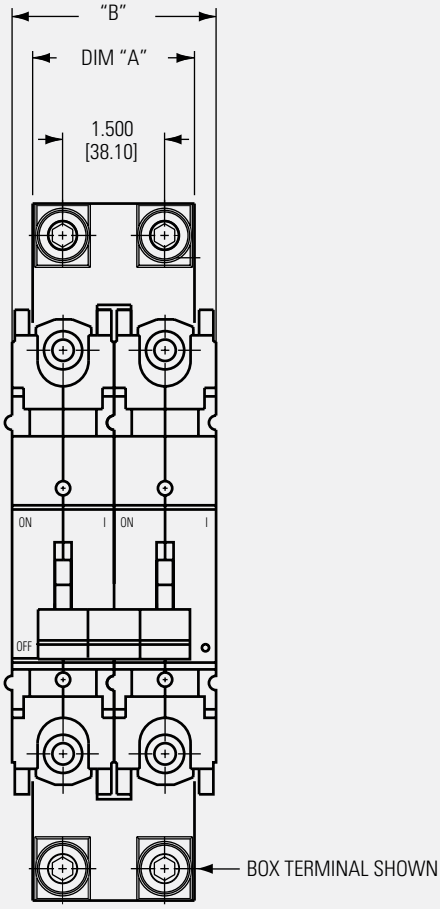

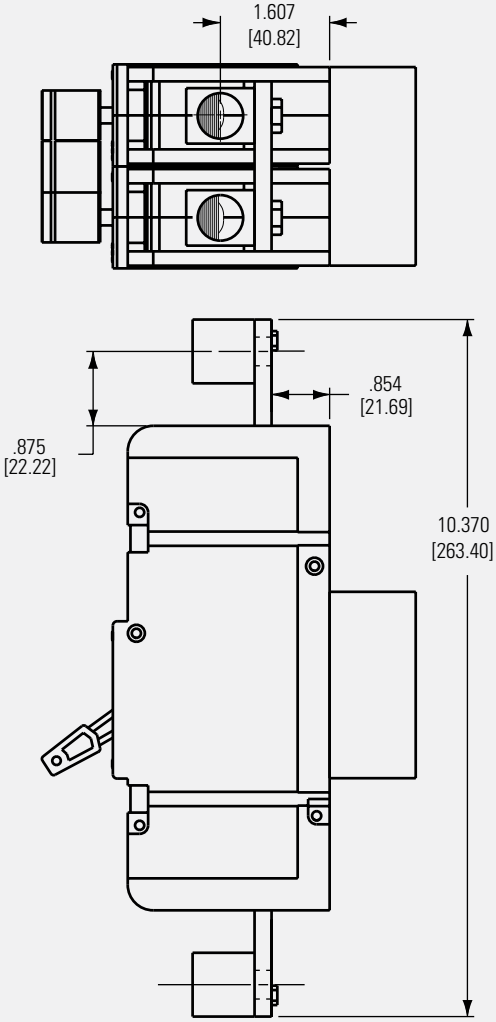

CONFIGURATIONS

Series Trip

The most popular configuration for magnetic protectors is the series trip, where the sensing coil and contacts are in series with the load being protected. The handle position conveniently indicates circuit status. In addition to providing conventional overcurrent protection, it's simultaneously used as an on-off switch.

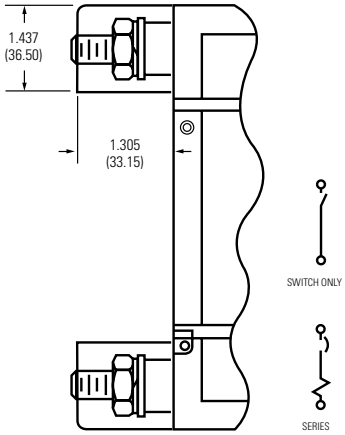

Auxiliary Switch

This is furnished as an integral part of a series pole in single or multi-pole assemblies. Isolated electrically from the protector's circuit, the switch works in unison with the power contacts and provides indication at a remote location of the protector's on-off status.

Alarm Switch

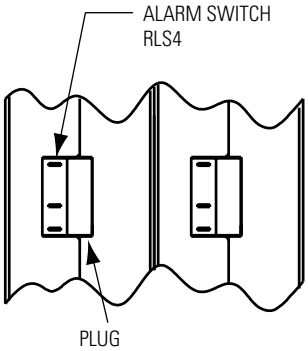

Series with Auxiliary Switch Configurations

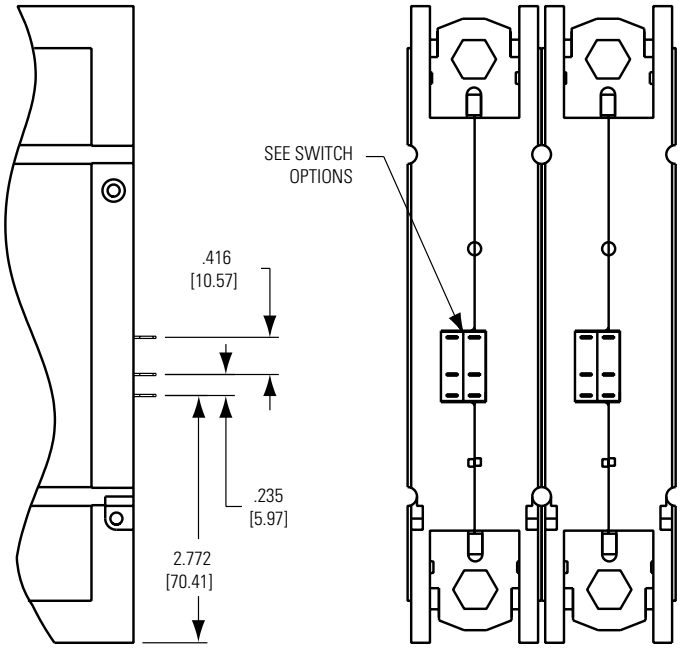

Auxiliary Switch

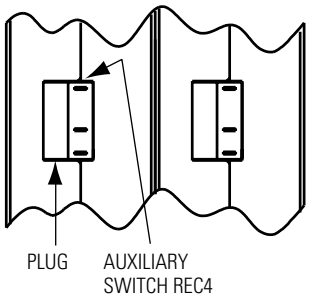

Alarm & Auxiliary Switch Combination

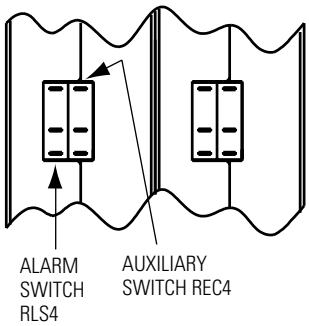

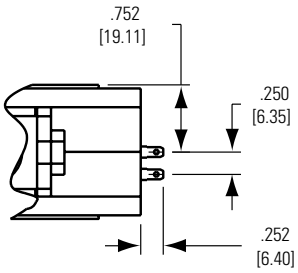

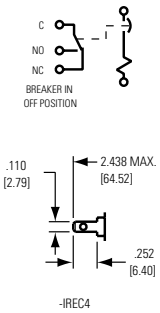

Relay Trip

This permits the overload sensing coil to be placed in a circuit which is electrically isolated from the trip contacts. The coil may be actuated by sensors monitoring pressure, flow, temperature, speed, etc. Other typical applications include crowbar, interlock and emergency rapid shut down circuitry. Trip may be accomplished by voltage or current, which must be removed after trip.

Shunt Trip

The shunt trip is designed for controlling two separate loads with one assembly. The control is established by providing overload protection for the critical load. When the current through this load becomes excessive and reaches the trip point, the protector will open and remove power from both loads simultaneously. The total current rating of both loads must not exceed the maximum contact rating.

Shunt Trip

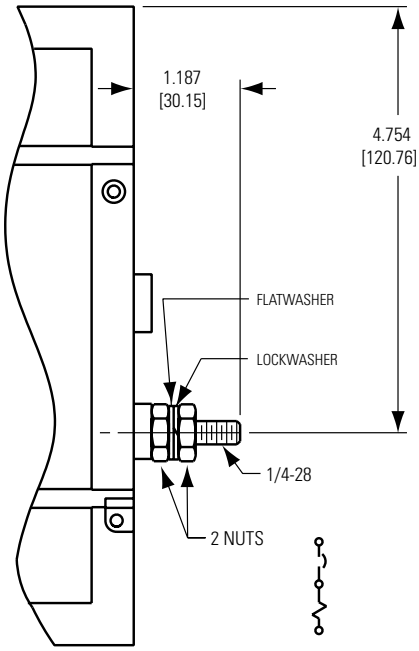

Relay Trip

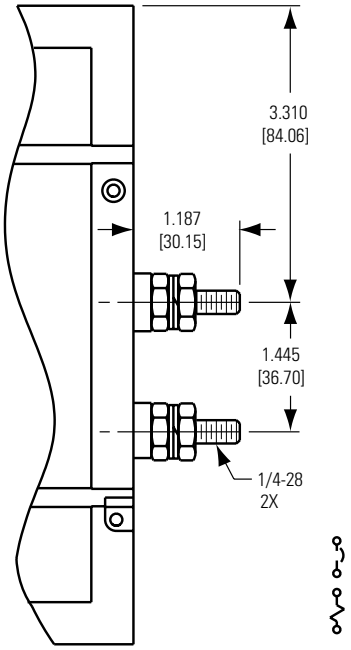

Metering Shunt

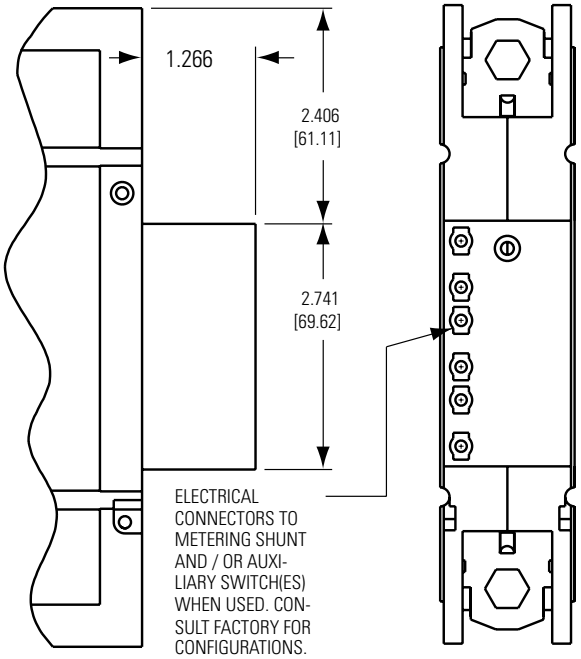

METERING SHUNT/AUXILIARY SWITCH CONNECTORS		
Description	MOLEX	AMP
Pin (Male)	02-09-2103	770147-1
Socket (Female)	02-09-1104	770146-1

OPERATING CHARACTERISTICS

Trip Free

Will trip open on overload, even when forcibly held on. This prevents the operator from damaging the circuit by holding the handle in the ON position.

Insulation Resistance

Will not be less than 100 megohms at 500 volts D.C.

Endurance

Test to be performed at rated current and rated voltage at 3mSec time constant DC. Rate of operation to be 5 operations per minute for breakers rated at 250 amps and less and 4 per minute for breakers rated above 250 amps. Breakers rated above 250 amps but 600 amps or less shall be rated for 1000 loaded operations and 5000 mechanical operations.

Auxiliary Switch

When supplied will be S.P.D.T. configuration with a maximum rating of 10 amperes 250 VAC 1 amp 80 Vdc. When optional metering shunt or parallel pole configuration is specified, maximum rating is 1 amp 80 Vdc.

High-Low Temperature

Circuit breakers will operate in the range from -40°C to +85°C. All agency testing is conducted with wire sized per 75°C chart of the National Electrical Code. In all cases the breaker connections should be sized to limit the maximum terminal temperature to 100°C absolute when the breaker is operating in the maximum ambient temperature at the maximum load current.

Overload

DC rated circuit breakers will withstand 50 operations at 600% of rated current. The current shall have no less than a 3mSec time constant at rated voltage. Units to be operated in groups of five at the rate of operations per minute with fifteen minutes between groups to allow for cool down.

Dielectric Strength

Circuit Breaker will withstand 1000 volts plus twice rated voltage 60 Hz AC for 60 seconds from terminal to terminal.

Voltage Ratings

On all types, voltages up to and including 160 volts DC. Multi-pole units can be supplied for 125/250 volts Vdc. All units will be marked with the standard maximum voltage. UL listed breakers will be labeled with the UL listed voltage.

DC Applications (typ)

A choice of delays is offered for DC applications. Delay 51 is a short delay for general purpose applications. Delay 52 is long enough to start certain types of motors and most transformer and capacitor loads. Delay 53 is a long delay for special motor applications.

All trip curves and trip currents are specified with the breaker mounted in the normal vertical position at ambient temperature of +25°C. For test and measurement purposes, the breakers should not carry current prior to application of overload for calibration test. For other than vertical mount position, consult factory.

General notes for Agency Approvals

All supplementary protectors are of the overcurrent (OC) type

The family of protectors has been evaluated for end use application for use group (UG) A

The terminals (FW) – Terminals are coded as follows:
0 – Suitable for factory wiring only
1 – Line terminals evaluated for field wiring
2 – Load terminals evaluated for field wiring
3 – Line and load terminals evaluated for field wiring

The maximum voltage ratings for which the protectors have been tested are shown in the chart

The current is the amperage range that the protectors have been tested

The tripping current (TC) – Tripping current is coded as a percentage of the ampere rating
0 – Tripping current is less than 125% of ampere rating
1 – Tripping current is in the range of 125% to 135% of ampere rating
2 – Tripping current is more than 135% of ampere rating
3 – Tripping current is 135% and meets MCCB trip time requirements

The overload rating (OL) - designates whether the protector has been tested for general use or motor starting applications.
0 – tested at 1.5 times amp rating for general use
1 – tested at 6 times AC rating or 10 times DC rating for motor starting

The short circuit current rating (SC) – The short circuit rating in amperes following a letter and number designating the test conditions and any calibration following the short circuit test is defined below:
C – Indicates short circuit test was conducted with series overcurrent protection
U – Indicates short circuit test was conducted without series overcurrent protection
1 – Indicates a recalibration was not conducted as part of the short circuit testing
2 – Indicates a recalibration was performed as part of the short circuit testing
3 – Indicates recalibration was performed along with the dielectric and voltage withstand for “Suitable for Further Use” rating

JRE/JRM/JREP/JRMP SUPPLEMENTARY PROTECTORS - AGENCY APPROVALS											
Volts (Volts)								Rated Current (Amps)		Interrupting Capacity (Amps)	
Voltage (V)	Frequency (Hz)	UG	FW	Phase	Min. Poles	TC	OL	UL/CSA	TUV	UL 508 & CSA	TUV
65	DC	A	0, 3	—	1	1	1	100-250	—	U2, 100000	—
65	DC	A	0, 3	—	2	1	1	275-400	—	U2, 100000	—
65	DC	A	0, 3	—	2	1	1	450	—	U2, 100000	—
65	DC	A	0, 3	—	3	1	1	450-600	—	U2, 100000	—
65	DC	A	0, 3	—	3	1	1	700	—	U2, 65000	—
65	DC	A	0, 3	—	3	1	1	700	—	U2, 100000	—
80	DC	—	—	—	1	—	—	—	15-250	—	10000/25000
160	DC	A	0, 3	—	1	1	1	100-250	15-250	U2, 10000	5000/10000
160	DC	A	0, 3	—	2	1	1	251-400	—	U2, 10000	—
160	DC	A	0, 3	—	3	1	1	401-600	—	U2, 10000	—
160	DC	A	0, 3	—	3	1	1	700	—	U2, 10000	—
277/480	50/60	A	0, 3	3	3	1	1	150	—	U2, 5000	—

JTE/JTM/JTEP/JTMP COMMUNICATIONS EQUIPMENT CIRCUIT BREAKERS - AGENCY APPROVALS							
Volts (Volts)				Rated Current (Amps)		Interrupting Capacity (Amps)	
Voltage (V)	Frequency (Hz)	Phase	Min. Poles	UL/CSA	TUV	UL 489A	TUV
65	DC	—	1	100 to 250	—	100000	—
65	DC	—	2	275 to 400	—	100000	—
65	DC	—	2	401 to 450	—	100000	—
65	DC	—	3	450 to 600	—	100000	—
65	DC	—	4	700 to 800	—	100000	—
65	DC	—	5	900 to 1000	—	65000	—
65	DC	—	6	1100 to 1200	—	65000	—
80	DC	—	1	—	15 to 250	—	25000
160	DC	—	1	100 to 250	15 to 250	10000	10000
160	DC	—	2	251 to 400	—	10000	—
160	DC	—	3	401 to 600	—	10000	—
160	DC	—	4	700 to 800	—	10000	—

JLE/JLM - AGENCY APPROVALS							
Volts (Volts)				Rated Current (Amps)		Interrupting Capacity (Amps)	
Voltage (V)	Frequency (Hz)	Phase	Min. Poles	UL/CSA	TUV	UL489 & CSA	TUV
65	DC	—	1	.10 - 250	—	100000	—
80	DC	—	1	—	15 - 250	—	25000
160	DC	—	1	.10 - 250	15 - 250	10000	10000
125/250	DC	—	2	100 - 250	—	10000	—
240	50/60	1	1	.10 - 250	—	10000	—
240	50/60	1 & 3	2	.10 - 250	—	18000	—

OPERATING CHARACTERISTICS

PERCENTAGE OF RATED CURRENT VS TRIP TIME IN SECONDS AT +25°C

Delay	100%	125% (Note A)	150%	200%	400%	600%	800%	1000%
51 & 51F	No Trip	.5 to 10	.25 to 3	.15 to 9	.05 to .3	.015 to .15	.01 to .09	.01 to .04
52 & 52F	No Trip	9 to 90	5 to 40	2 to 15	.5 to 3	.03 to 1	.01 to .28	.01 to .08
53 & 53F	No Trip	100 to 1000	50 to 400	22 to 150	4 to 25	.5 to 5	.010 to 2	.01 to .1
61 & 61F	No Trip	.4 to 10	.25 to 3	.13 to .9	.03 to .2	.015 to .15	.01 to .09	.008 to .045
62 & 62F	No Trip	9 to 95	5 to 40	2 to 15	.05 to 3	.03 to 1	.01 to .28	.008 to .08
63 & 63F	No Trip	100 to 1100	48 to 400	20 to 150	4 to 25	.5 to 6	.01 to 2	.008 to .1

NOMINAL DCR / IMPEDANCE

Current Ratings (Amps)	Resistance (ohms) DC Delays 51, 52, 53
100	.000375
110	.000375
125	.000340
150	.000325
175	.000315
200	.000225
225	.000225
250	.000225
400	.000125
600	.000083
800	.000063
1,000	.000050
1,200	.000042

Notes:
Resistance is plus or minus 50%.

If a metering shunt option is provided it will add the shunts resistance to these values (i.e. A 400 Amp metering shunt would add (R=V/I). 0000625 Ohms of resistance to the non-metering shunt value of .000125 Ohms or .0001875 Ohms for a 400 Amp unit with a metering shunt).

DC resistance values are based on measurements by the voltmeter ammeter method. Rated current applied for one hour and at a voltage not less than 20 volts.

RECOMMENDED TORQUE SPECIFICATIONS

Component	Torque (in-lbs)
10-32 Mounting Inserts	10 to 12
M5 Mounting Inserts	8 to 10
3/8-16 and M10 x 1.5 Captive Nuts	220 to 230
3/8-16 and M10 x 1.5 Studs	220 to 230
Solderless Connectors	180

APPROXIMATE WEIGHT PER POLE

Pounds	Grams
2.25	1020

INRUSH PULSE TOLERANCE

Delay	Pulse Tolerance
61, 62, 63	8 times rated current (approx)
61F, 62F, 63F	12 times rated current (approx)

Inrush Pulse Tolerance

The table shown provides a comparison of inrush pulse tolerance with and without the inertial delay feature for each of the 50/60Hz delays. Pulse tolerance is defined as a single pulse of half sine wave peak current amplitude of 8 milliseconds duration that will not trip the circuit breaker.

DELAY CURVES

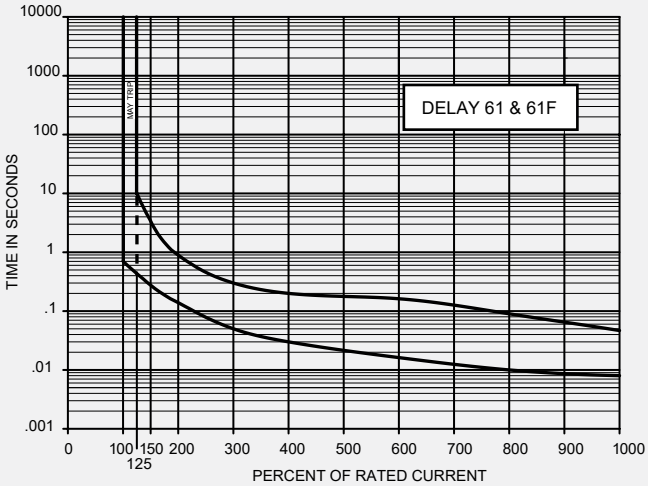

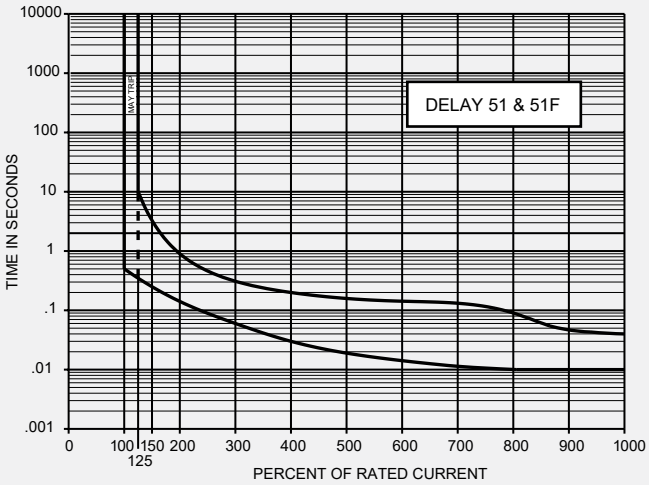

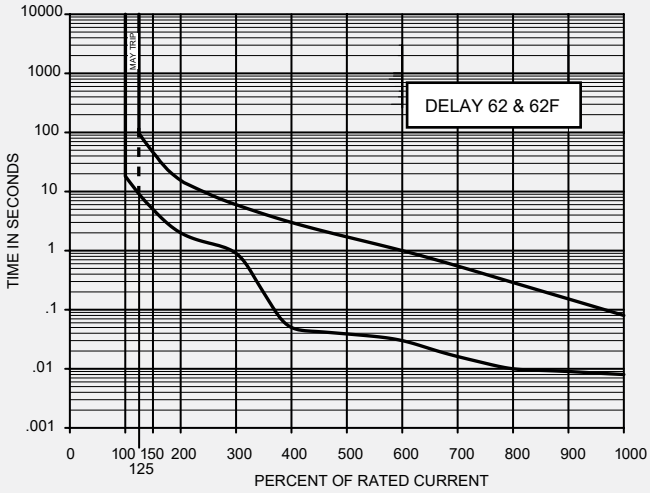

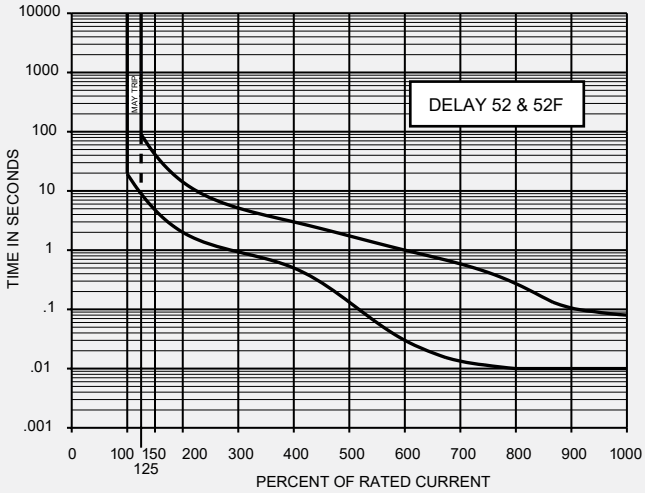

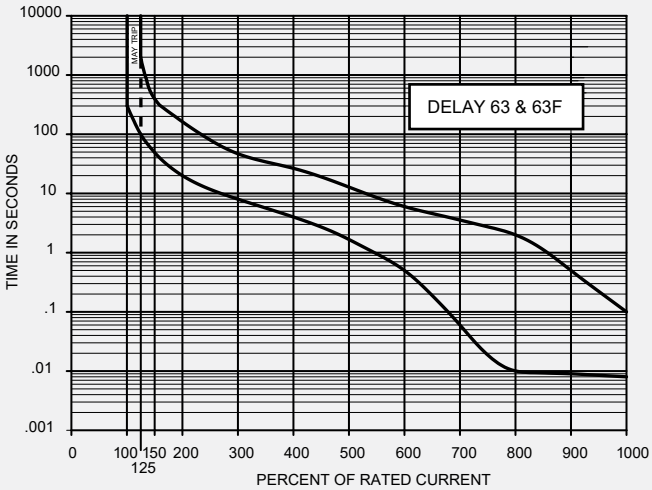

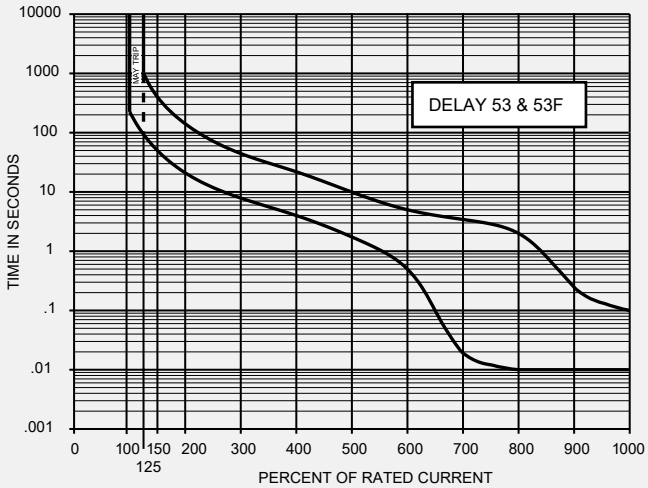

How to Order

The ordering code for JAE/JRE/JLE F-Frame Circuit Protectors may be determined by following the steps in the decision tables shown here.

The coding given permits a self-assigning part number for standard configurations. Factory part numbers are assigned to units with mixed ratings, combinations of styles or construction not listed in the Third Decision Table, etc. With these, it is suggested that order entry be by description and/or drawings, and a part number will be established.

Additionally, it is standard policy to establish a factory-assigned part number whenever a descriptive drawing exists to ensure cross reference, traceability and manufacturing control.

For example, the following is the code for a single pole breaker series trip, with mid-trip handle indication, auxiliary switch, short delay, 65 volts DC maximum voltage rating with 3/8-16 captive nuts in a current rating of 250 amperes and metric inserts.

To determine the ordering number of your particular JAE/JRE/JLE unit, simply follow the steps shown. You may use this number to place an order or as a reference for further questions you may have.

1 First Decision

Type	
JLE	UL Listed
JLM	UL Listed Mid Trip Construction
JRE	UL Recognized
JREP	UL Recognized above 250 amps
JRM	UL Recognized Mid Trip Construction
JRMP	UL Recognized Mid Trip Construction above 250 amps
JTE	UL Listed Telecom Specification
JTEP	UL Listed Telecom Specification above 250 amps
JTM	UL Listed Telecom Specification Mid Trip Construction
JTMP	UL Listed Telecom Specification Mid Trip Construction above 250 amps
JAE	Non Agency
JAEP	Non Agency above 250 amps
JAM	Non Agency Mid Trip Construction
JAMP	Non Agency Mid Trip Construction above 250 amps

Notes:

A 10-32 inserts are provided for front mounting on all units. M5 ISO metric mounting inserts are available and are specified by the eight decision in the part number.

B The auxiliary switch is located on the left hand pole (viewed from terminal end) unless specified otherwise. Note this is the only location available for breakers rated over 250 amps. The switch is available as an alarm switch (changes state when breaker electrically trips) or as an auxiliary switch (changes state when the breaker contacts change state either from tripping or operation of the breaker handle). See outline drawing for location of alarm and auxiliary switches. Note alarm switches are available only with mid trip option. When both an alarm and auxiliary switch are specified with a metering shunt, only the C and NO or C and NC terminals from each switch are available for field termination.

C 3/8-16 captive nuts are available for bus bar terminations or crimp lugs (specify front or back termination). 3/8-16 long and short studs are also available (specify front or back mount). A number 6 through 300 MCM AL/CU solderless connector is available (specify front or back mount).

D Only series construction and DC ratings are available in current carrying poles above 250 amps. Consult factory for special requirements.

E The coding given permits a self-assigning part number but with certain limitations, (due to the adaptability of magnetic protectors to complex circuits) which require a need for a factory assigned part number. Typical examples are units with mixed ratings, combinations of styles, or construction not listed in the third decision table, etc. With these, it is suggested that order entry be by description and/or drawings, and a part number will be established. Additionally, it is standard policy to establish a factory assigned part number wherever a descriptive drawing exists to provide cross-reference, traceability, and manufacturing control.

F When specifying a protector for AC motor start or high inrush applications, the peak amplitude and surge duration should be specified for factory assistance in rating selection.

G Since magnetic protectors with time delay are somewhat attitude and temperature sensitive, all trip curves and trip currents are specified with the protector mounted in the normal vertical position at ambient temperature of 25°C. Protectors do not carry current prior to application of overload for calibration test. For other than vertical mount position, consult factory.

H A 25mV at rated current non-isolated metering shunt is available as an option (see outline drawing). The shunt accuracy is 1% full scale 25°C ambient.

I Dual coil construction is available. Consult the factory.

J Decisions referencing this note may be replaced by a factory assigned nondescript number.

Example: JLM -1 - IREC4 - 51- 1 - F1 - 250 - A - V

1 2 3 4 5 6 7 8

2 Second Decision

Poles

-1*	Single pole
-2	Two poles
-3	Three poles
-4	Four poles
-5	Five poles
-6	Six poles

*Single pole unit above 250 Amps are supplied as parallel milti-pole assemblies. The second decision must indicate the physical number of poles.

4 Fourth Decision

Frequency and Delay

Standard		Option
50	DC instant trip	
51	DC short delay	51F
52	DC med. delay	52F
53	DC long delay	53F
60	50/60Hz instant trip	
61	50/60Hz short delay	61F
62	50/60Hz med. delay	62F
63	50/60Hz long delay	63F
SW	Switch only	

An **F** after any delay denotes high pulse tolerance construction.

6 Sixth Decision

Terminal Selection

	Terminal	Terminal Connect
-B0	Solderless connector*	Back
-F0	Solderless connector	Front
-B1	3/8 - 16 captive nuts	Back
-F1	3/8 - 16 captive nuts	Front
-B2	.437 hole	–
-B3	3/8 - 16 stud terminals**	Back
-F3	3/8 - 16 stud terminals	Front
-B4	3/8 - 16 stud terminals long with spacers*	Back

* Automatically get anti-flashover for multi-pole construction. Refer to outline drawings.

** Automatically get anti-flashover barrier for multi-pole construction with voltage ratings above 250 volts.

3 Third Decision

Internal Configuration

-0	Switch only
-1	Series
-3	Shunt construction***
-4	Relay construction***
-REC4	Auxiliary switch* (STD) .110 quick connect
-REG4	Auxiliary switch* .110 quick connect**
-REC5	Auxiliary switch* (STD) .187 quick connect
-RLS4	Alarm switch* (STD) .110 quick connect
-RLS5	Alarm switch* .187 quick connect
-DAA4	Dual auxiliary & alarm switch* (STD) .110 quick connect
-DAA5	Dual auxiliary & alarm switch* .187 quick connect

* Auxiliary switch located in the left hand pole when viewed from the terminal end. All meter shunt and parallel pole builds that require an auxiliary switch will automatically get a XXX4 type switch. To connect to the switch terminals which are brought through the cover use a Molex 02-09-1104 or an Amp 770146-1 crimp terminal.

** Gold Contacts

*** Shunt and Relay construction not available above 250 Amps and not available in UL Listed Breakers

5 Fifth Decision

Voltage and Current

	Maximum Voltage	Maximum Current (Amps)
-1	65Vdc	1200A
-2	125Vdc	800A
-3	160Vdc	800A
-4	125/250Vdc*	250A
-5	240Vac	250A
-6	277Vac	250A
-7	277/480Vac	150A Only

*Two poles breaking

V = TUV and CCC Approved

Approval requires the addition of a V at the end of the part number, which denotes TUV and CCC approval. Consult the factory for availability.

C = CCC Approved

This approval requires the addition of a C at the end of the part number. The unit will not be TUV Approved.

7 Seventh Decision

Current Ratings (see note J)

Amperes	Amperes
100	**450**
125	**500**
150	**550**
175	**600**
200	**700**
225	**800**
250	**900**
275	**1000**
300	**1100**
350	**1200**
400	

8 Eighth Decision

Optional

A	Optional metric inserts M5
S	Optional metering shunt