阅读申明

1.本站收集的数据手册和产品资料都来自互联网，版权归原作者所有。如读者和版权方有任何异议请及时告之，我们将妥善解决。
2.本站提供的中文数据手册是英文数据手册的中文翻译，其目的是协助用户阅读，该译文无法自动跟随原稿更新，同时也可能存在翻译上的不当。建议读者以英文原稿为参考以便获得更精准的信息。
3.本站提供的产品资料，来自厂商的技术支持或者使用者的心得体会等，其内容可能存在描叙上的差异，建议读者做出适当判断。
4.如需与我们联系，请发邮件到marketing@iczoom.com，主题请标有“数据手册”字样。

Read Statement

1. The datasheets and other product information on the site are all from network reference or other public materials, and the copyright belongs to the original author and original published source. If readers and copyright owners have any objections, please contact us and we will deal with it in a timely manner.

2. The Chinese datasheets provided on the website is a Chinese translation of the English datasheets. Its purpose is for reader’s learning exchange only and do not involve commercial purposes. The translation cannot be automatically updated with the original manuscript, and there may also be improper translations. Readers are advised to use the English manuscript as a reference for more accurate information.

3. All product information provided on the website refer to solutions from manufacturers’ technical support or users the contents may have differences in description, and readers are advised to take the original article as the standard.

4. If you have any questions, please contact us at marketing@iczoom.com and mark the subject with “Datasheets”.

Downloaded from www.iczoom.com

SL1021A/B, SL1024A/B and PMT8 Series

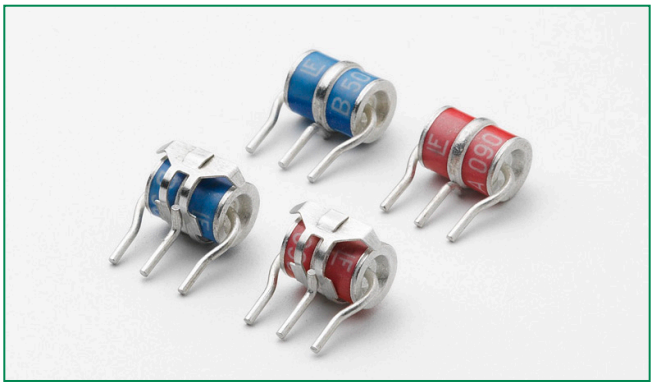

Agency Approvals

AGENCY	AGENCY FILE NUMBER
	E128662

3 Electrode GDT Graphical Symbol

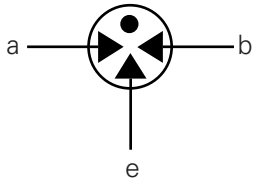

a = TIP
b = RING
e = GROUND
(center electrode)

Features

- RoHS compliant
- Low insertion loss
- Excellent response to fast rising transients
- Ultra low capacitance
- 10KA (A suffix devices) / 20KA (B suffix devices) surge capability tested with 8/20µs pulse as defined by IEC 61000-4-5
- Available with thermal failsafe option (add 'F' suffix to part number)

Applications

SL1021 / SL1024:

- Broadband equipment
- ADSL equipment
- XDSL equipment
- Satellite and CATV equipment
- Splitters
- General telecom equipment

PMT8:

- Telecom network interfaces
- Telephone line cards
- Repeaters
- Modems
- Line test equipment

Description

GDT circuit protection devices dissipate electrical surge energy safely within a contained plasma gas. Commonly used to help protect sensitive telecom and networking equipment and lines, GDTs protect from damage that may result from lightning strikes and equipment switching operations.

The Littelfuse GDT series described in this document are available in a variety of leaded and surface mount forms and offered with and without optional fail-safe clip. Please refer to the electrical specifications, dimension and packaging options section of this document for additional information.

SL1021A/B and SL1024A/B Series:

SL1021A/B and SL1024A/B series GDTs are designed to offer high levels of performance on fast rising transients in the range of 100V/µS to 1KV/µS, which are those most likely created by induced lightning disturbances.

These devices feature ultra low capacitance (typically 1.5pF or less) and are extremely robust with SL102xA devices able to divert a 10,000 Amp pulse without destruction, and SL102xB suffix devices able to divert a 20,000 Amp pulse without destruction.

These series offer optimized internal geometry which provide low insertion loss at high frequencies, ideal for the protection of broadband and other high speed transmission equipment.

PMT8 Series:

PMT8 GDT's are telecom grade devices designed to meet the recommendations in CCITT-K12 and Bellcore GR-1361-CORE. The three electrode configuration is used in applications where simultaneous crowbar action of two signal lines is required.

Product Characteristics

Materials	Dull Tin Plate 17.5 ± 12.5 Microns. with ceramic insulator
Product Marking	'LF' mark, voltage& date code: SL102x**A - Red**/White text SL102x**B & PMT8 - Blue**/White text
Glow to arc transition current	~ 1Amp
Glow Voltage	~60-200 Volts
Storage and Operation Temperature	-40 to +90°C
Transverse Voltage (Delay Time)	< 0.2µSec (Tested to ITU-T Rec. K.12)
Arc Voltage	~10 to 35 Volts
Holdover Voltage	<150mS (Tested to ITU-T Rec. K.12)

©2009 Littelfuse, Inc.
Specifications are subject to change without notice.
Please refer to www.littelfuse.com for current information.
Customer should verify actual device performance in their specific applications.

Electrical Characteristics

Device Specifications (at 25°C)								Life Ratings				
Part Number*	DC Voltage 100V/Sec.			DC Voltage 100 V/ µSec.	DC Voltage 1kV/ µSec.	Capacitance (@1Mhz)	Insulation Resistance	AC Current 50Hz 1Sec.x10[1]	Surge Current 8/20µSec x10[1]	Max Single Surge 8/20µSec[1]	Max Single Surge 10/350µSec[1]	Surge Life 10/1000 µSecx300[1]
	MIN	TYP	MAX				MIN					
SL1021A090 SL1024A090 SL1021B090 SL1024B090 PMT 8 090	72	90	108	500	650	<1.5pF	>10^{10} Ω (at 50V)	10Amps	10kA[2] 20kA[3]	15kA[2] 25kA[3]	4kA[2] 5kA[3]	200Amps
SL1021A145 SL1024A145 SL1021B145 SL1024B145	116	145	174		600		>10^{10} Ω (at 100V)				2.5kA[2] 5kA[3]	
SL1021A150 SL1024A150 SL1021B150 SL1024B150	120	150	180									
SL1021A200	150	200	250									
SL1021A230 SL1024A230 SL1021B230 SL1024B230 PMT 8 230	184	230	276	450	650							
SL1021A250 SL1024A250 SL1021B250 SL1024B250 PMT 8 250	200	250	300	500								
SL1021A260 SL1024A260 SL1021B260 SL1024B260	210	260	310	550	700							
SL1021A300 SL1024A300 SL1021B300 SL1024B300	240	300	360	650	850							
SL1021A350 SL1024A350 SL1021B350 SL1024B350 PMT 8 350	280	350	420	700	900							
SL1021A400 SL1024A400 SL1021B400 SL1024B400 PMT 8 400	320	400	480	850	950							
SL1021A420 SL1024A420 SL1021B420 SL1024B420	345	420	500									
SL1021A450 SL1024A450 SL1021B450 SL1024B450	360	450	540	900	1000							
SL1021A500 SL1024A500 SL1021B500 SL1024B500	400	500	600	950	1100							
SL1021A600 SL1024A600	480	600	720	1000	1200							

NOTES:
*Max capacitance is 1.5 pF, measured at 1 MHz.
1. Total current through centre electrode, tested in accordance with ITU-T Rec K.12
2. SL A series
3. SL B series & PMT 8 series

©2009 Littelfuse, Inc.
Specifications are subject to change without notice.
Please refer to www.littelfuse.com for current information.
Customer should verify actual device performance in their specific applications.

Time vs. Current for Failsafe

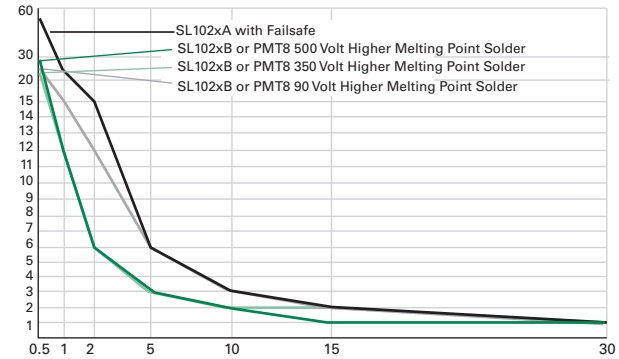

Voltage vs. Time Characteristic

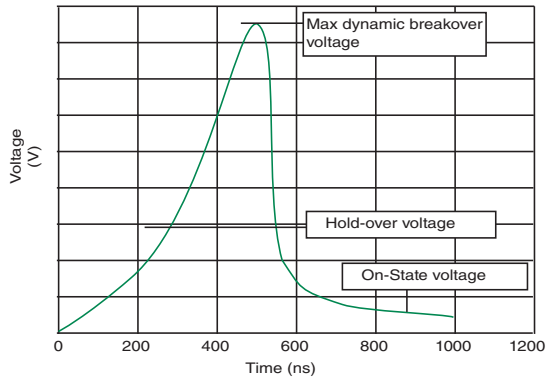

Soldering Parameters - Reflow Soldering (Surface Mount Devices)

Reflow Condition		Pb – Free assembly
Pre Heat	-Temperature Min ($T_{s(min)}$)	150°C
	-Temperature Max ($T_{s(max)}$)	200°C
	-Time (Min to Max) (t_s)	60 – 180 secs
Average ramp up rate (Liquidus Temp (T_L) to peak		3°C/second max
$T_{S(max)}$ to T_L - Ramp-up Rate		5°C/second max
Reflow	-Temperature (T_L) (Liquidus)	217°C
	-Temperature (t_L)	60 – 150 seconds
Peak Temperature (T_P)		$260^{+0/-5}$ °C
Time within 5°C of actual peak Temperature (t_p)		10 – 30 seconds
Ramp-down Rate		6°C/second max
Time 25°C to peak Temperature (T_P)		8 minutes Max.
Do not exceed		260°C

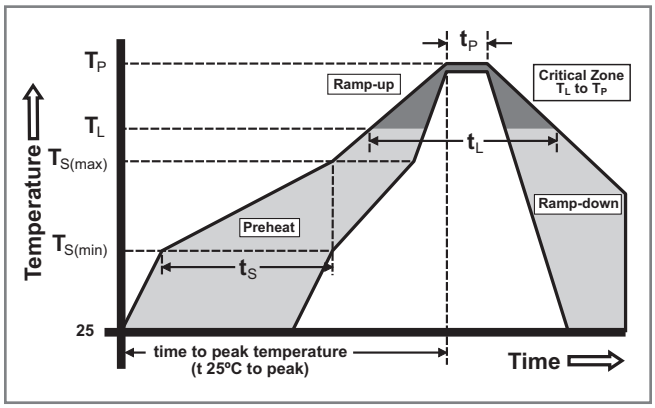

Soldering Parameters - Hand Soldering

Solder Iron Temperature: 350° C +/- 5°C
Heating Time: 5 seconds max.

Soldering Parameters - Wave Soldering (Thru-Hole Devices)

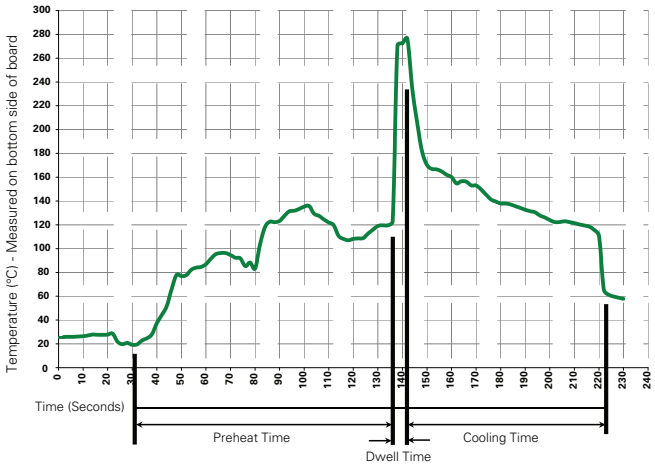

Recommended Process Parameters:

Wave Parameter	Lead-Free Recommendation
Preheat: (Depends on Flux Activation Temperature)	(Typical Industry Recommendation)
Temperature Minimum:	100° C
Temperature Maximum:	150° C
Preheat Time:	60-180 seconds
Solder Pot Temperature:	280° C Maximum
Solder Dwell Time:	2-5 seconds

Note: Surge Arrestors with a Failsafe mechanism should be individually examined after soldering

©2009 Littelfuse, Inc.
Specifications are subject to change without notice.
Please refer to www.littelfuse.com for current information.
Customer should verify actual device performance in their specific applications.

Device Dimensions

NOTE: Failsafe option dimensions shown in green.

Shaped Radial Leaded Devices:

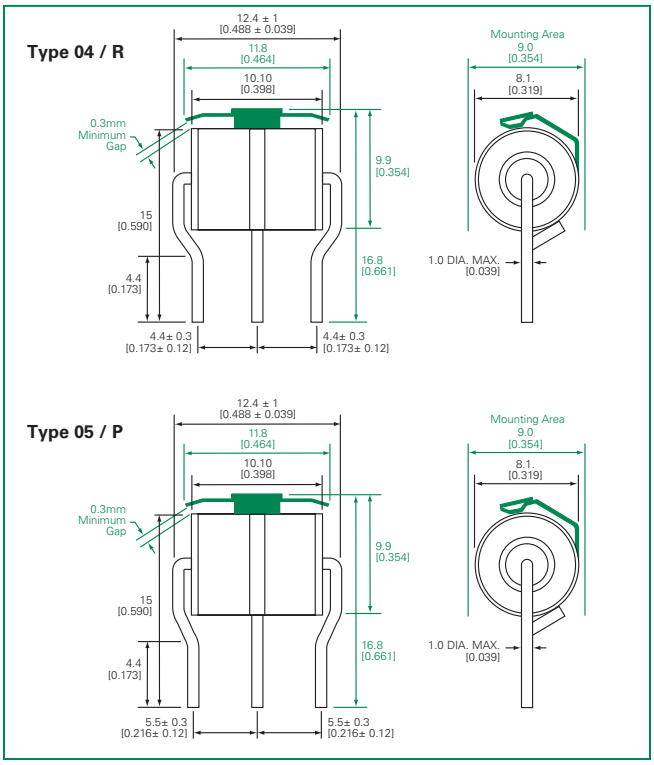

Surface Mount Devices:

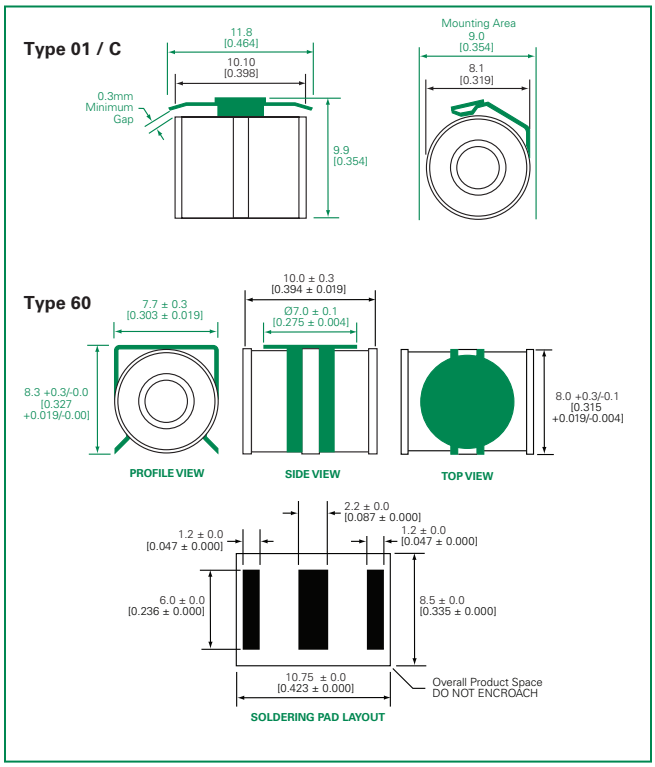

Straight "T" Leaded Devices:

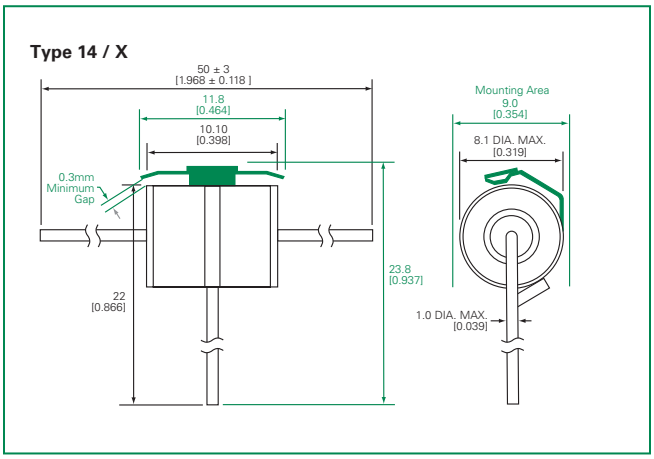

Straight Radial Leaded Devices:

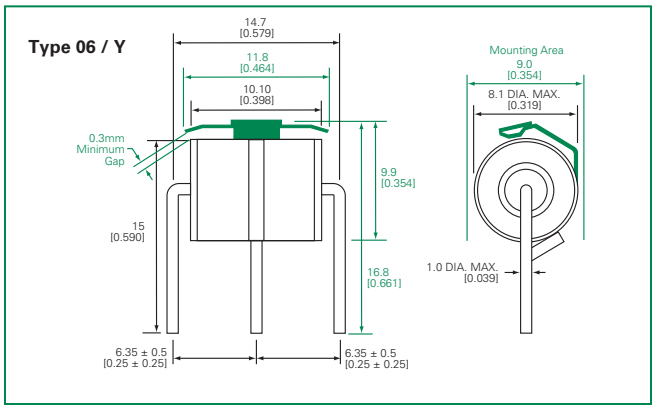

©2009 Littelfuse, Inc.
Specifications are subject to change without notice.
Please refer to www.littelfuse.com for current information.
Customer should verify actual device performance in their specific applications.

Part Numbering System and Ordering Information

SL102x x xxx x x

Series
SL1021
SL1024

Surge Capability
A = 10kA
B = 20kA

Breakdown Voltage

090 = 90V	300 = 300V
145 = 145V	350 = 350V
150 = 150V	400 = 400V
200 = 200V	420 = 420V
230 = 230V	450 = 450V
250 = 250V	500 = 500V
260 = 260V	600 = 600V

Configuration Code
(See Device Dimensions section)

C	Y
R	S
P	X

Option Code
Blank = No failsafe
F or G = With Failsafe

PMT8 xxx x x

Series
PMT8

Breakdown Voltage
090 = 90V
230 = 230V
250 = 250V
350 = 350V
400 = 400V

Configuration Code
(See Device Dimensions section)

01	10
04	14
05	60
06	

Option Code
Blank = No Failsafe
F = With Failsafe

Packaging

Device Type	Description	Quantity
Type 01 / C	100pcs/tray x 5 trays per carton	500
Type 04 / R	100pcs/tray x 5 trays per carton	500
Type 05 / P	100pcs/tray x 5 trays per carton	500
Type 06 / Y	100pcs/tray x 5 trays per carton	500
Type 14 / X	50pcs/tray x 5 trays per carton	250
Type 60	500pcs/reel* x 10 reels per carton	5000

* For tape and reel specifications, please contact factory.

©2009 Littelfuse, Inc.
Specifications are subject to change without notice.
Please refer to www.littelfuse.com for current information.
Customer should verify actual device performance in their specific applications.