阅读申明

1.本站收集的数据手册和产品资料都来自互联网，版权归原作者所有。如读者和版权方有任何异议请及时告之，我们将妥善解决。
2.本站提供的中文数据手册是英文数据手册的中文翻译，其目的是协助用户阅读，该译文无法自动跟随原稿更新，同时也可能存在翻译上的不当。建议读者以英文原稿为参考以便获得更精准的信息。
3.本站提供的产品资料，来自厂商的技术支持或者使用者的心得体会等，其内容可能存在描叙上的差异，建议读者做出适当判断。
4.如需与我们联系，请发邮件到marketing@iczoom.com，主题请标有“数据手册”字样。

Read Statement

1. The datasheets and other product information on the site are all from network reference or other public materials, and the copyright belongs to the original author and original published source. If readers and copyright owners have any objections, please contact us and we will deal with it in a timely manner.

2. The Chinese datasheets provided on the website is a Chinese translation of the English datasheets. Its purpose is for reader’s learning exchange only and do not involve commercial purposes. The translation cannot be automatically updated with the original manuscript, and there may also be improper translations. Readers are advised to use the English manuscript as a reference for more accurate information.

3. All product information provided on the website refer to solutions from manufacturers’ technical support or users the contents may have differences in description, and readers are advised to take the original article as the standard.

4. If you have any questions, please contact us at marketing@iczoom.com and mark the subject with “Datasheets”.

Downloaded from www.iczoom.com

Single Supply/Low Power/256-Tap/2-Wire Bus Quad Digitally-Controlled (XDCP™) Potentiometers

X9259

The X9259 integrates four digitally controlled potentiometers (XDCP) on a monolithic CMOS integrated circuit.

The digitally controlled potentiometers are implemented with a combination of resistor elements and CMOS switches. The position of the wipers are controlled by the user through the 2-wire bus interface. Each potentiometer has associated with it a volatile Wiper Counter Register (WCR) and four nonvolatile Data Registers that can be directly written to and read by the user. The content of the WCR controls the position of the wiper. At power-up, the device recalls the content of the default Data Registers of each DCP (DR00, DR10, DR20, and DR30) to the corresponding WCR.

The XDCP can be used as a three-terminal potentiometer or as a two-terminal variable resistor in a wide variety of applications including control, parameter adjustments, and signal processing.

Features

- Four separate potentiometers in one package
- 256 resistor taps–0.4% resolution
- 2-wire serial interface for write, read, and transfer operations of the potentiometer
- Wiper resistance: 100Ω typical at V_{CC} = 5V
- 4 nonvolatile data registers for each potentiometer
- Nonvolatile storage of multiple wiper positions
- Standby current <5µA max
- V_{CC}: 2.7V to 5.5V operation
- 50kΩ version of total resistance
- Endurance: 100,000 data changes per bit per register
- 100 year data retention
- Single supply version of X9258
- 24 Ld SOIC, 24 Ld TSSOP
- Low power CMOS
- Pb-Free (RoHS compliant)

Functional Diagram

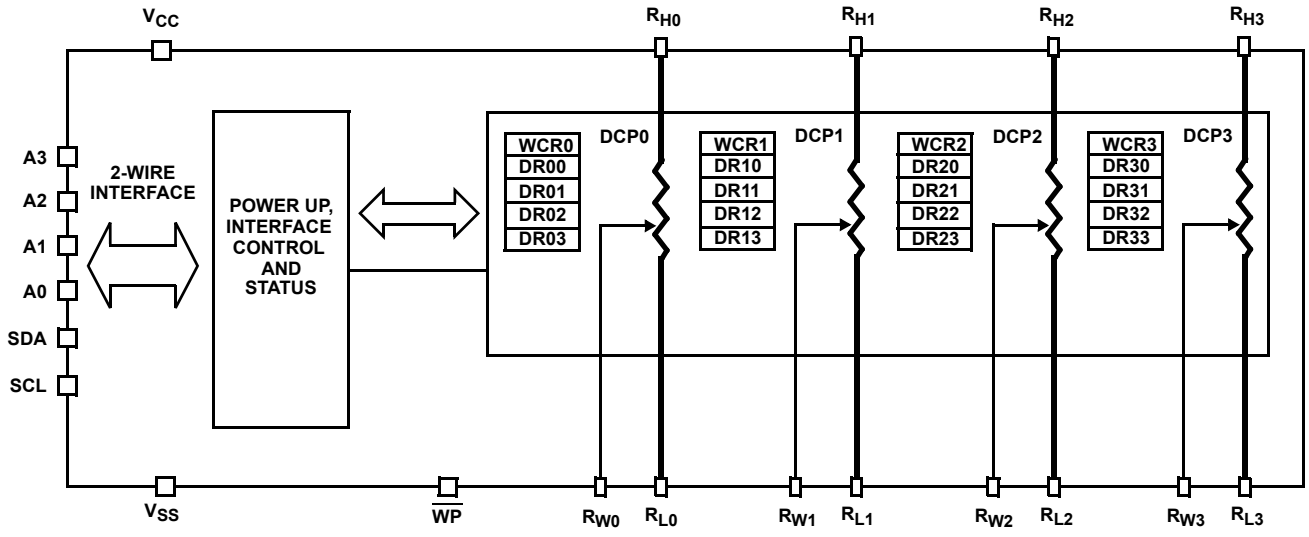

CAUTION: These devices are sensitive to electrostatic discharge; follow proper IC Handling Procedures.
1-888-INTERSIL or 1-888-468-3774 | Copyright Intersil Americas LLC 2005-2007, 2014. All Rights Reserved
Intersil (and design) and XDCP are trademarks owned by Intersil Corporation or one of its subsidiaries.
All other trademarks mentioned are the property of their respective owners.

Ordering Information

PART NUMBER (Notes 1, 3)	PART MARKING	V_{CC} LIMITS (V)	R_{TOTAL} (kΩ)	TEMP RANGE (°C)	PACKAGE (RoHS Compliant)	PKG. DWG. #
X9259US24Z (Note 2)	X9259US Z	5 ±10%	50	0 to +70	24 Ld SOIC	M24.3
X9259UV24Z	X9259UV Z			0 to +70	24 Ld TSSOP	M24.173
X9259US24IZ (Note 2)	X9259US ZI			-40 to +85	24 Ld SOIC	M24.3
X9259UV24IZ (Note 2)	X9259UV ZI			-40 to +85	24 Ld TSSOP	M24.173
X9259US24Z-2.7 (Note 2)	X9259US ZF	2.7 to 5.5		0 to +70	24 Ld SOIC	M24.3
X9259US24IZ-2.7 (Note 2)	X9259US ZG			-40 to +85	24 Ld SOIC	M24.3
X9259UV24Z-2.7	X9259UV ZF			0 to +70	24 Ld TSSOP	M24.173
X9259UV24IZ-2.7 (Note 2)	X9259UV ZG			-40 to +85	24 Ld TSSOP	M24.173

NOTES:

1. Intersil Pb-free plus anneal products employ special Pb-free material sets; molding compounds/die attach materials and 100% matte tin plate termination finish, which are RoHS compliant and compatible with both SnPb and Pb-free soldering operations. Intersil Pb-free products are MSL classified at Pb-free peak reflow temperatures that meet or exceed the Pb-free requirements of IPC/JEDEC J STD-020.
2. Add "T1" suffix for tape and reel.
3. For Moisture Sensitivity Level (MSL), please see product information page for X9259. For more information on MSL, please see tech brief TB363.

Circuit Level Applications

- Vary the gain of a voltage amplifier
- Provide programmable DC reference voltages for comparators and detectors
- Control the volume in audio circuits
- Trim out the offset voltage error in a voltage amplifier circuit
- Set the output voltage of a voltage regulator
- Trim the resistance in Wheatstone bridge circuits
- Control the gain, characteristic frequency and Q-factor in filter circuits
- Set the scale factor and zero point in sensor signal conditioning circuits
- Vary the frequency and duty cycle of timer ICs
- Vary the DC biasing of a pin diode attenuator in RF circuits
- Provide a control variable (I, V, or R) in feedback circuits

System Level Applications

- Adjust the contrast in LCD displays
- Control the power level of LED transmitters in communication systems
- Set and regulate the DC biasing point in an RF power amplifier in wireless systems
- Control the gain in audio and home entertainment systems
- Provide the variable DC bias for tuners in RF wireless systems
- Set the operating points in temperature control systems
- Control the operating point for sensors in industrial systems
- Trim offset and gain errors in artificial intelligent systems

Pin Configuration

X9259
24 LD SOIC/TSSOP
TOP VIEW

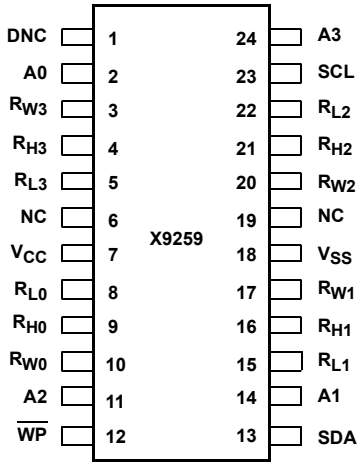

Pin Descriptions

PIN #	PIN NAME	DESCRIPTION
2	A0	Device Address for 2-wire bus. (See Note 4)
3	R_{W3}	Wiper Terminal of DCP3
4	R_{H3}	High Terminal of DCP3
5	R_{L3}	Low Terminal of DCP3
7	V_{CC}	System Supply Voltage
8	R_{L0}	Low Terminal of DCP0
9	R_{H0}	High Terminal of DCP0
10	R_{W0}	Wiper Terminal of DCP0
11	A2	Device Address for 2-wire bus. (See Note 4)
12	$\overline{WP}$	Hardware Write Protect – Active Low
13	SDA	Serial Data Input/Output for 2-wire bus.
14	A1	Device Address for 2-wire bus. (See Note 4)
15	R_{L1}	Low Terminal of DCP1
16	R_{H1}	High Terminal of DCP1
17	R_{W1}	Wiper Terminal of DCP1
18	V_{SS}	System Ground
20	R_{W2}	Wiper Terminal of DCP2
21	R_{H2}	High Terminal of DCP2
22	R_{L2}	Low Terminal of DCP2
23	SCL	Serial Clock for 2-wire bus.
24	A3	Device Address for 2-wire bus. (See Note 4)
6, 19	NC	No Connect
1	DNC	Do Not Connect

NOTE:

4. A0 through A3 Device address pins must be tied to a logic level.

Functional Pin Descriptions

Bus Interface Pins

SERIAL DATA INPUT/OUTPUT (SDA)

The SDA is a bidirectional serial data input/output pin for a 2-wire slave device and is used to transfer data into and out of the device. It receives device address, opcode, wiper register address and data sent from a 2-wire master at the rising edge of the serial clock SCL, and it shifts out data after each falling edge of the serial clock SCL.

It is an open-drain output and may be wire-ORed with any number of open drain or open collector outputs. An open-drain output requires the use of a pull-up resistor.

SERIAL CLOCK (SCL)

This input is used by a 2-wire master to supply a 2-wire serial clock to the X9259.

DEVICE ADDRESS (A3 THROUGH A0)

The Address inputs are used to set the least significant 4 bits of the 8-bit slave address. A match in the slave address serial data stream must be made with the address input in order to initiate communication with the X9259. A maximum of 16 devices may occupy the 2-wire serial bus. Device pins A3 through A0 must be tied to a logic level, which specifies the external address of the device, see Figures 3, 4, and 5.

Potentiometer Pins

R_H, R_L

The R_H and R_L pins are equivalent to the terminal connections on a mechanical potentiometer. Since there are 4 potentiometers, there are 4 sets of R_H and R_L such that R_{H0} and R_{L0} are the terminals of DCP0 and so on.

R_W

The wiper pin are equivalent to the wiper terminal of a mechanical potentiometer. Since there are 4 potentiometers, there are 4 sets of R_W such that R_{W0} is the terminal of DCP0 and so on.

Bias Supply Pins

SYSTEM SUPPLY VOLTAGE (V_{CC}) AND SUPPLY GROUND (V_{SS})

The V_{CC} pin is the system supply voltage. The V_{SS} pin is the system ground.

Other Pins

NO CONNECT

No connect pins should be left open. These pins are used for Intersil manufacturing and testing purposes.

HARDWARE WRITE PROTECT INPUT ($\overline{WP}$)

The $\overline{WP}$ pin when LOW, prevents nonvolatile writes to the Data Registers.

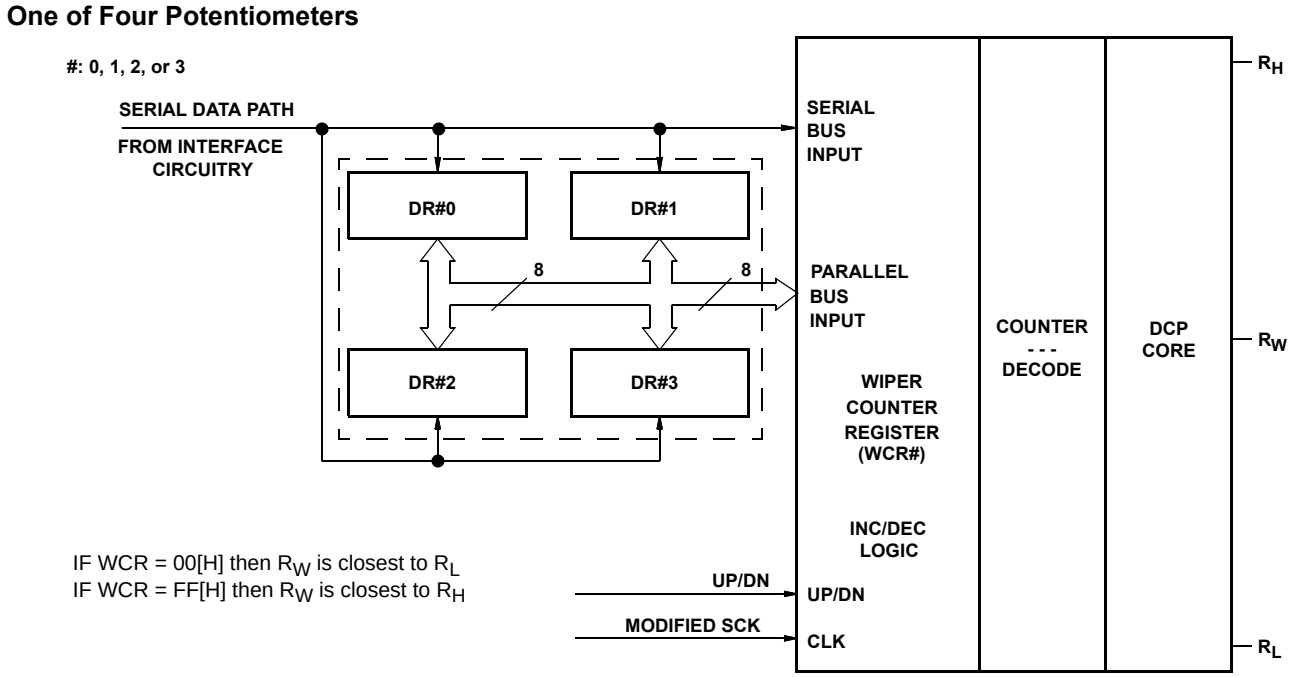

FIGURE 1. DETAILED POTENTIOMETER BLOCK DIAGRAM

Principles of Operation

The X9259 is an integrated circuit incorporating four DCPs and their associated registers and counters, and the serial interface providing direct communication between a host and the potentiometers.

DCP Description

Each DCP is implemented with a combination of resistor elements and CMOS switches. The physical ends of each DCP are equivalent to the fixed terminals of a mechanical potentiometer (R_H and R_L pins). The RW pin is an intermediate node, equivalent to the wiper terminal of a mechanical potentiometer.

The position of the wiper terminal within the DCP is controlled by an 8-bit volatile Wiper Counter Register (WCR).

Power Up and Down Recommendations

There are no restrictions on the power-up or power-down conditions of V_{CC} and the voltages applied to the potentiometer pins provided that V_{CC} is always more positive than or equal to V_H, V_L, and V_W, i.e., $V_{CC} \geq V_H, V_L, V_W$. The V_{CC} ramp rate specification is always in effect.

Wiper Counter Register (WCR)

The X9259 contains four Wiper Counter Registers, one for each potentiometer. The Wiper Counter Register can be envisioned as a 8-bit parallel and serial load counter with its outputs decoded to select one of 256 wiper positions along its resistor array. The contents of the WCR can be altered in four ways: it may be written directly by the host via the Write Wiper Counter Register instruction (serial load); it may be written indirectly by transferring the contents of one of four associated data registers via the XFR Data Register instruction (parallel load); it can be modified one step at a time by the Increment/Decrement instruction (see "Instructions" section on page 8 for more details). Finally, it is loaded with the contents of its data register zero (DR#0) upon power-up, (see Figure 1 on page 4).

The Wiper Counter Register is a volatile register; that is, its contents are lost when the X9259 is powered-down. Although the register is automatically loaded with the value in DR#0 upon power-up, this may be different from the value present at power-down. Power-up guidelines are recommended to ensure proper loadings of the DR#0 value into the WCR# (see AN162).

Data Registers (DR)

Each of the four DCPs has four 8-bit nonvolatile Data Registers. These can be read or written directly by the host. Data can also be transferred between any of the four data registers and the associated Wiper Counter Register. All operations changing data in one of the data registers is a nonvolatile operation and takes a maximum of 10ms.

If the application does not require storage of multiple settings for the potentiometer, the Data Registers can be used as regular memory locations for system parameters or user preference data.

Bit [7:0] are used to store one of the 256 wiper positions (0 ~ 255).

TABLE 1. WIPER COUNTER REGISTER, WCR (8-BIT), WCR[7:0]: USED TO STORE THE CURRENT WIPER POSITION (VOLATILE).

WCR7	WCR6	WCR5	WCR4	WCR3	WCR2	WCR1	WCR0
(MSB)							(LSB)

TABLE 2. DATA REGISTER, DR (8-BIT), BIT [7:0]: USED TO STORE WIPER POSITIONS OR DATA (NONVOLATILE).

BIT 7	BIT 6	BIT 5	BIT 4	BIT 3	BIT 2	BIT 1	BIT 0
(MSB)							(LSB)

Serial Interface

The X9259 supports a bidirectional bus oriented protocol. The protocol defines any device that sends data onto the bus as a transmitter and the receiving device as the receiver. The device controlling the transfer is a master and the device being controlled is the slave. The master always initiates data transfers and provide the clock for both transmit and receive operations. Therefore, the X9259 operates as a slave device in all applications.

All 2-wire interface operations must begin with a START, followed by an Identification Byte, that selects the X9259. All communication over the 2-wire interface is conducted by sending the MSB of each byte of data first.

Clock and Data Conventions

Data states on the SDA line can change only during SCL LOW periods. SDA state changes during SCL HIGH are reserved for indicating START and STOP conditions (see Figure 2). On power-up of the X9259, the SDA pin is in the input mode.

START Condition

All commands to the X9259 are preceded by the start condition, which is a HIGH to LOW transition of SDA while SCL is HIGH. The X9259 continuously monitors the SDA and SCL lines for the START condition and does not respond to any command until this condition is met (see Figure 2).

STOP Condition

All communications must be terminated by a STOP condition, which is a LOW to HIGH transition of SDA while SCL is HIGH, (see Figure 2). The STOP condition is also used to place the device into the Standby Power mode after a Read sequence. A STOP condition can only be issued after the transmitting device has released the bus.

Acknowledge

An ACK, Acknowledge, is a software convention used to indicate a successful data transfer. The transmitting device, either master or slave, releases the SDA bus after transmitting eight bits. During the ninth clock cycle, the receiver pulls the SDA line LOW to acknowledge the reception of the eight bits of data, (see Figure 3).

The X9259 responds with an ACK after recognition of a START condition followed by a valid Identification Byte, and once again after successful receipt of an Instruction Byte. The X9259 also responds with an ACK after receiving a Data Byte after a Write Instruction.

A valid Identification Byte contains the Device Type Identifier 0101, as the four MSBs, and the Device Address bits matching the logic states of pins A3, A2, A1, and A0, as the four LSBs (see Figure 4 on page 8).

In the Read mode, the device transmits eight bits of data, releases the SDA line, and then monitors the line for an ACK. The device continues transmitting data if an ACK is detected. The device terminates further data transmissions if an ACK is not detected. The master must then issue a STOP condition to place the device into a known state.

During the internal nonvolatile Write operation, the X9259 ignores the inputs at SDA and SCL, and does not issue an ACK after Identification bytes.

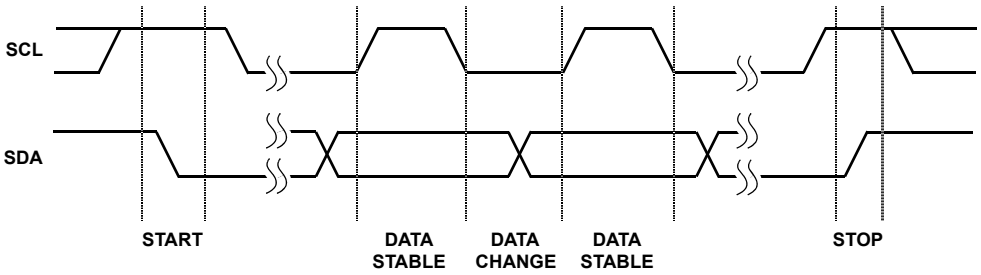

FIGURE 2. VALID DATA CHANGES, START, AND STOP CONDITIONS

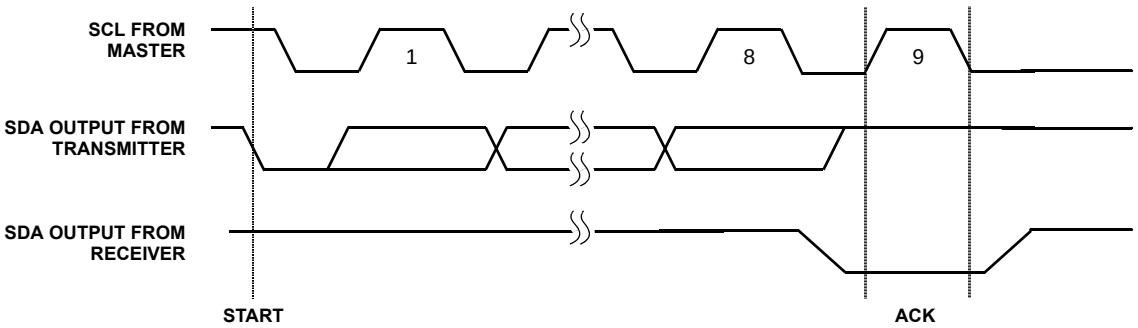

FIGURE 3. ACKNOWLEDGE RESPONSE FROM RECEIVER

Identification Byte

The first byte sent to the X9259 from the host is called the Identification Byte. The most significant four bits are a Device Type Identifier, ID[3:0] bits, which must be 0101. Refer to Table 3.

Only the device which Slave Address matches the incoming device address sent by the master executes the instruction. The A3 - A0 inputs can be actively driven by CMOS input signals or tied to V_{CC} or V_{SS}.

INSTRUCTION BYTE (I)

The next byte sent to the X9259 contains the instruction and register pointer information. The four most significant bits are used provide the instruction opcode I [3:0]. The RB and RA bits point to one of the four data registers of each associated XDCP. The least two significant bits point to one of four Wiper Counter Registers or DCPs. The format is shown in Table 4.

Data Register Selection

REGISTER	RB	RA
DR#0	0	0
DR#1	0	1
DR#2	1	0
DR#3	1	1
#: 0, 1, 2, or 3		

The least significant four bits of the Identification Byte are the Slave Address bits, AD[3:0]. To access the X9259, these four bits must match the logic values of pins A3, A2, A1, and A0.

TABLE 3. IDENTIFICATION BYTE FORMAT

DEVICE TYPE IDENTIFIER				SLAVE ADDRESS			
ID3	ID2	ID1	ID0	A3	A2	A1	A0
0	1	0	1	Logic value of pins A3, A2, A1, and A0			
(MSB)							(LSB)

TABLE 4. INSTRUCTION BYTE FORMAT

INSTRUCTION OPCODE				REGISTER SELECTION		DCP SELECTION (WCR SELECTION)	
I3	I2	I1	I0	RB	RA	P1	P0
(MSB)							(LSB)

TABLE 5. INSTRUCTION SET

INSTRUCTION	INSTRUCTION SET								OPERATION
	I3	I2	I1	I0	RB	RA	P1	P0	
Read Wiper Counter Register	1	0	0	1	0	0	1/0	1/0	Read the contents of the Wiper Counter Register pointed to by P1 - P0
Write Wiper Counter Register	1	0	1	0	0	0	1/0	1/0	Write new value to the Wiper Counter Register pointed to by P1 - P0
Read Data Register	1	0	1	1	1/0	1/0	1/0	1/0	Read the contents of the Data Register pointed to by P1 - P0 and RB - RA
Write Data Register	1	1	0	0	1/0	1/0	1/0	1/0	Write new value to the Data Register pointed to by P1 - P0 and RB - RA
XFR Data Register to Wiper Counter Register	1	1	0	1	1/0	1/0	1/0	1/0	Transfer the contents of the Data Register pointed to by P1 - P0 and RB - RA to its associated Wiper Counter Register
XFR Wiper Counter Register to Data Register	1	1	1	0	1/0	1/0	1/0	1/0	Transfer the contents of the Wiper Counter Register pointed to by P1 - P0 to the Data Register pointed to by RB - RA
Global XFR Data Registers to Wiper Counter Registers	0	0	0	1	1/0	1/0	0	0	Transfer the contents of the Data Registers pointed to by RB - RA of all four pots to their respective Wiper Counter Registers
Global XFR Wiper Counter Registers to Data Register	1	0	0	0	1/0	1/0	0	0	Transfer the contents of both Wiper Counter Registers to their respective data Registers pointed to by RB - RA of all four DCPs
Increment/Decrement Wiper Counter Register	0	0	1	0	0	0	1/0	1/0	Enable Increment/decrement of the Control Latch pointed to by P1 - P0

NOTE: 1/0 = data is one or zero

Instructions

Four of the nine instructions are three bytes in length. These instructions are:

- **Read Wiper Counter Register** – read the current wiper position of the selected potentiometer.
- **Write Wiper Counter Register** – change current wiper position of the selected potentiometer.
- **Read Data Register** – read the contents of the selected Data Register.
- **Write Data Register** – write a new value to the selected Data Register.

The basic sequence of the three byte instructions is illustrated in Figure 5. These three-byte instructions exchange data between the WCR and one of the Data Registers. A transfer from a Data Register to a WCR is essentially a write to a static RAM, with the static RAM controlling the wiper position. The response of the wiper to this action is delayed by t_{WRL}. A transfer from the WCR (current wiper position), to a Data Register is a write to nonvolatile memory and takes a minimum of t_{WR} to complete. The transfer can occur between one of the four potentiometer's WCR, and one of its associated registers, DRs; or it may occur globally, where the transfer occurs between all potentiometers and one associated register.

Four instructions require a two-byte sequence to complete. These instructions transfer data between the host and the X9259; either between the host and one of the data registers or directly between the host and the Wiper Counter Register. These instructions are:

- **XFR Data Register to Wiper Counter Register** – This transfers the contents of one specified Data Register to the associated Wiper Counter Register.
- **XFR Wiper Counter Register to Data Register** – This transfers the contents of the specified Wiper Counter Register to the specified associated Data Register.
- **Global XFR Data Register to Wiper Counter Register** – This transfers the contents of all specified Data Registers to the associated Wiper Counter Registers.
- **Global XFR Wiper Counter Register to Data Register** – This transfers the contents of all Wiper Counter Registers to the specified associated Data Registers.

Increment/Decrement Command

The final command is Increment/Decrement (Figures 6 and 7). The Increment/Decrement command is different from the other commands. Once the command is issued and the X9259 has responded with an Acknowledge, the master can clock the selected wiper up and/or down in one segment steps; thereby, providing a fine tuning capability to the host. For each SCL clock pulse (t_{HIGH}) while SDA is HIGH, the selected wiper moves one wiper position towards the R_H terminal. Similarly, for each SCL clock pulse while SDA is LOW, the selected wiper moves one resistor wiper position towards the R_L terminal.

See "Instruction Format" on page 10 for more details.

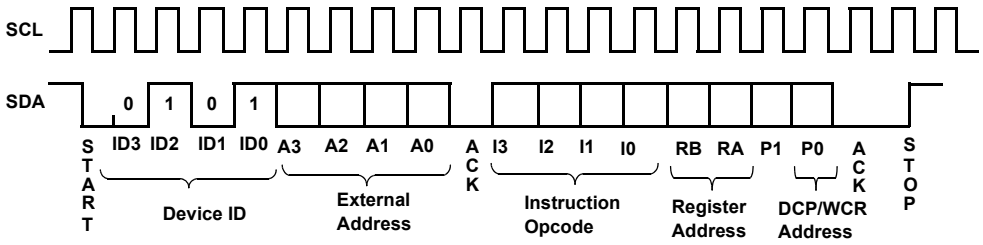

FIGURE 4. TWO-BYTE INSTRUCTION SEQUENCE

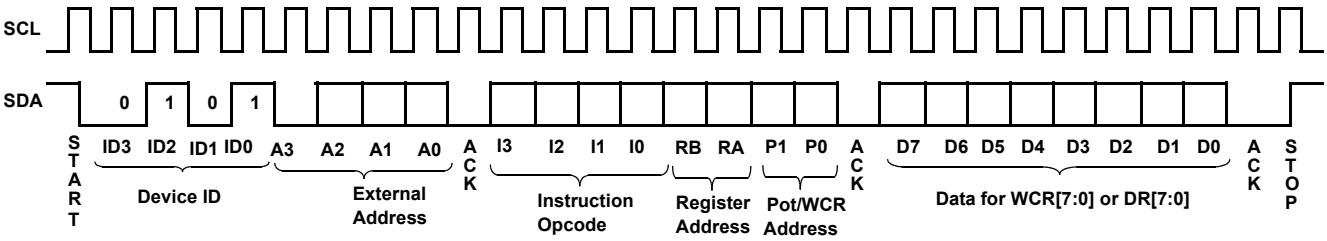

FIGURE 5. THREE-BYTE INSTRUCTION SEQUENCE 2-WIRE INTERFACE

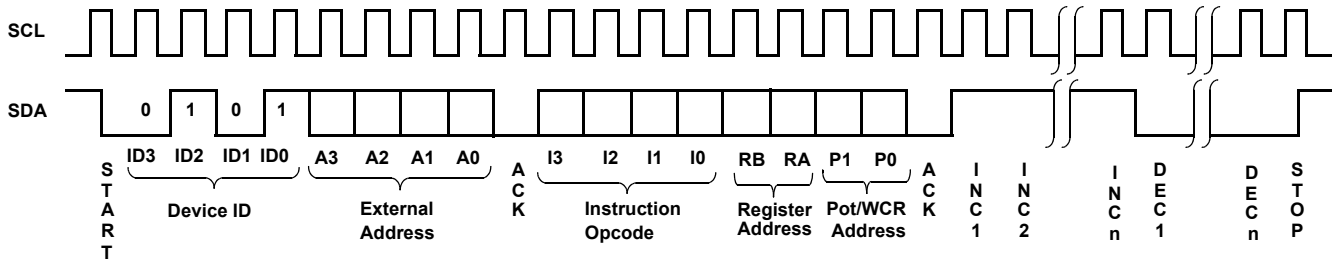

FIGURE 6. INCREMENT/DECREMENT INSTRUCTION SEQUENCE 2-WIRE INTERFACE

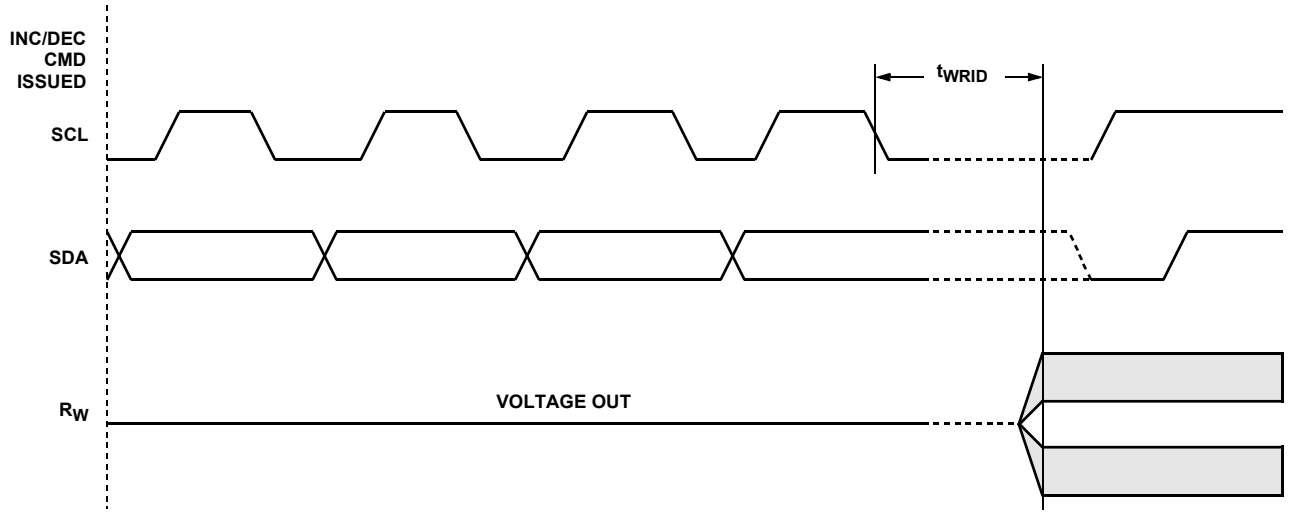

FIGURE 7. INCREMENT/DECREMENT TIMING SPECIFICATION

Instruction Format

Read Wiper Counter Register (WCR)

START	DEVICE TYPE IDENTIFIER				DEVICE ADDRESSES				SACK	INSTRUCTION OPCODE				DR/WCR ADDRESSES				SACK	WIPER POSITION (SENT BY X9259 ON SDA)								MACK	STOP
	0	1	0	1	A3	A2	A1	A0		1	0	0	1	0	0	P1	P0		WCR7	WCR6	WCR5	WCR4	WCR3	WCR2	WCR1	WCR0		

Write Wiper Counter Register (WCR)

START	DEVICE TYPE IDENTIFIER				DEVICE ADDRESSES				SACK	INSTRUCTION OPCODE				DR/WCR ADDRESSES				SACK	WIPER POSITION (SENT BY MASTER ON SDA)								SACK	STOP
	0	1	0	1	A3	A2	A1	A0		1	0	1	0	0	0	P1	P0		WCR7	WCR6	WCR5	WCR4	WCR3	WCR2	WCR1	WCR0		

Read Data Register (DR)

START	DEVICE TYPE IDENTIFIER				DEVICE ADDRESSES				SACK	INSTRUCTION OPCODE				DR/WCR ADDRESSES				SACK	WIPER POSITION (SENT BY X9259 ON SDA)								MACK	STOP
	0	1	0	1	A3	A2	A1	A0		1	0	1	1	RB	RA	P1	P0		WCR7	WCR6	WCR5	WCR4	WCR3	WCR2	WCR1	WCR0		

Write Data Register (DR)

START	DEVICE TYPE IDENTIFIER				DEVICE ADDRESSES				SACK	INSTRUCTION OPCODE				DR/WCR ADDRESSES				SACK	WIPER POSITION (SENT BY MASTER ON SDA)								SACK	STOP	HIGH-VOLTAGE WRITE CYCLE
	0	1	0	1	A3	A2	A1	A0		1	1	0	0	RB	RA	P1	P0		WCR7	WCR6	WCR5	WCR4	WCR3	WCR2	WCR1	WCR0			

Global XFR Data Register (DR) to Wiper Counter Register (WCR)

START	DEVICE TYPE IDENTIFIER				DEVICE ADDRESSES				SACK	INSTRUCTION OPCODE				DR/WCR ADDRESSES				SACK	STOP
	0	1	0	1	A3	A2	A1	A0		0	0	0	1	RB	RA	0	0		

Global XFR Wiper Counter Register (WCR) to Data Register (DR)

START	DEVICE TYPE IDENTIFIER				DEVICE ADDRESSES				SACK	INSTRUCTION OPCODE				DR/WCR ADDRESSES				SACK	STOP	HIGH-VOLTAGE WRITE CYCLE
	0	1	0	1	A3	A2	A1	A0		1	0	0	0	RB	RA	0	0			

Transfer Wiper Counter Register (WCR) to Data Register (DR)

START	DEVICE TYPE IDENTIFIER				DEVICE ADDRESSES				SACK	INSTRUCTION OPCODE				DR/WCR ADDRESSES				SACK	STOP	HIGH-VOLTAGE WRITE CYCLE
	0	1	0	1	A3	A2	A1	A0		1	1	1	0	RB	RA	P1	P0			

Transfer Data Register (DR) to Wiper Counter Register (WCR)

START	DEVICE TYPE IDENTIFIER				DEVICE ADDRESSES				SACK	INSTRUCTION OPCODE				DR/WCR ADDRESSES				SACK	STOP
	0	1	0	1	A3	A2	A1	A0		1	1	0	1	RB	RA	P1	P0		

Increment/Decrement Wiper Counter Register (WCR)

START	DEVICE TYPE IDENTIFIER				DEVICE ADDRESSES				SACK	INSTRUCTION OPCODE				DR/WCR ADDRESSES				SACK	INCREMENT/DECREMENT (SENT BY MASTER ON SDA)					STOP
	0	1	0	1	A3	A2	A1	A0		0	0	1	0	0	0	P1	P0		I/D	I/D	. . . .	I/D	I/D	

NOTES:

5. “MACK”/”SACK”: stands for the acknowledge sent by the Master/Slave.
6. “A3 ~ A0”: stands for the device addresses sent by the master.
7. “X”: indicates that it is a “0” for testing purpose but physically it is a “don’t care” condition.
8. “I”: stands for the increment operation, SDA held high during active SCL phase (high).
9. “D”: stands for the decrement operation, SDA held low during active SCL phase (high).

Absolute Maximum Ratings

Temperature under bias . . . . . -65°C to +135°C
Storage temperature . . . . . -65°C to +150°C
Voltage on SCL, SDA, any address input, V_{CC}
with respect to V_{SS} . . . . . -1V to +7V
$\Delta V = | (V_H - V_L) |$ 5.5V
Lead temperature (soldering, 10 seconds) . . . . . 300°C
I_W (10 seconds) . . . . . ±6mA

Recommended Operating Conditions

Temperature (Commercial) . . . . . 0°C to +70°C
Temperature (Industrial) . . . . . -40°C to +85°C
Supply Voltage (V_{CC}) (Note 13) Limits
X9259 . . . . . 5V ± 10%
X9259-2.7 . . . . . 2.7V to 5.5V
Wiper current . . . . . ±3mA
Power rating (each pot) 50mW
Pb-Free Reflow Profile . . . . . see TB493

CAUTION: Do not operate at or near the maximum ratings listed for extended periods of time. Exposure to such conditions may adversely impact product reliability and result in failures not covered by warranty.

Analog Specifications

Over recommended industrial (2.7V) operating conditions unless otherwise stated.

SYMBOL	PARAMETER	TEST CONDITIONS	LIMITS			
			MIN	TYP	MAX	UNITS
R_{TOTAL}	End-to-End Resistance	U version		50		kΩ
	End-to-End Resistance Tolerance				±20	%
R_W	Wiper Resistance	$I_W = \frac{V(V_{CC})}{R_{TOTAL}}$ at V_{CC} = 3V			300	Ω
		$I_W = \frac{V(V_{CC})}{R_{TOTAL}}$ at V_{CC} = 5V			220	Ω
V_{TERM}	Voltage on any R_H or R_L Pin	V_{SS} = 0V	V_{SS}		V_{CC}	V
	Noise (Note 15)	Ref: 1V		-120		dB/√Hz
	Resolution			0.4		%
	Absolute Linearity (Note 10)	$R_{w(n)(actual)} - R_{w(n)(expected)}$ (Note 14)	-1		+1	MI (Note 12)
	Relative Linearity (Note 11)	$R_{w(n+1)} - [R_{w(n)} + MI]$ (Note 14)	-0.6		+0.6	MI (Note 12)
	Temperature Coefficient of R_{TOTAL} (Note 15)			±300		ppm/°C
	Ratiometric Temp. Coefficient (Note 15)			±20		ppm/°C
$C_H/C_L/C_W$	Potentiometer Capacitances (Note 15)	See SPICE Macromodel on page 14.		10/10/25		pF

NOTES:

10. Absolute linearity is utilized to determine actual wiper voltage versus expected voltage as determined by wiper position when used as a potentiometer.
11. Relative linearity is utilized to determine the actual change in voltage between two successive tap positions when used as a potentiometer. It is a measure of the error in step size.
12. MI = RTOT / 255 or (R_H – R_L) / 255, single pot
13. During power up $V_{CC} > V_H$, V_L, and V_W.
14. n = 0, 1, 2, ...,255; m = 0, 1, 2, ..., 254.

DC Electrical Specifications

Over the recommended operating conditions unless otherwise specified.

SYMBOL	PARAMETER	TEST CONDITIONS	LIMITS			
			MIN	TYP	MAX	UNITS
I_{CC1}	V_{CC} supply current (active)	f_{SCL} = 400kHz; V_{CC} = +6V; SDA = Open; (for 2-Wire, Active, Read and Volatile Write States only)			3	mA
I_{CC2}	V_{CC} supply current (nonvolatile write)	f_{SCL} = 400kHz; V_{CC} = +6V; SDA = Open; (for 2-Wire, Active, Nonvolatile Write State only)			5	mA
I_{SB}	V_{CC} current (standby)	V_{CC} = +6V; V_{IN} = V_{SS} or V_{CC}; SDA = V_{CC}; (for 2-Wire, Standby State only)			5	µA
I_{LI}	Input leakage current	V_{IN} = V_{SS} to V_{CC}			10	µA
I_{LO}	Output leakage current	V_{OUT} = V_{SS} to V_{CC}			10	µA
V_{IH}	Input HIGH voltage		V_{CC} x 0.7			V
V_{IL}	Input LOW voltage				V_{CC} x 0.3	V
V_{OL}	Output LOW voltage	I_{OL} = 3mA			0.4	V
V_{OH}	Output HIGH voltage	I_{OH} = -1mA, $V_{CC} \geq$ +3V	V_{CC} - 0.8			V
V_{OH}	Output HIGH voltage	I_{OH} = -0.4mA, $V_{CC} \leq$ +3V	V_{CC} - 0.4			V

Endurance and Data Retention

PARAMETER	MIN	UNITS
Minimum endurance	100,000	Data changes per bit per register
Data retention	100	years

Capacitance

SYMBOL	TEST	MAX	UNITS	TEST CONDITIONS
$C_{IN/OUT}$ (Note 15)	Input / Output capacitance (SDA)	8	pF	V_{OUT} = 0V
C_{IN} (Note 15)	Input capacitance (SCL, $\overline{WP}$, A2, A1 and A0)	6	pF	V_{IN} = 0V

Power-up Timing

SYMBOL	PARAMETER	MIN	MAX	UNITS
tr VCC (Note 15)	V_{CC} Power-up rate	0.2		V/ms
tPUR (Note 16)	Power-up to initiation of read operation		1	ms
tPUW (Note 16)	Power-up to initiation of write operation		50	ms

AC Test Conditions

Input Pulse Levels	V_{CC} x 0.1 to V_{CC} x 0.9
Input rise and fall times	10ns
Input and output timing level	V_{CC} x 0.5

NOTES:

15. This parameter is not 100% tested
16. t_{PUR} and t_{PUW} are the delays required from the time the power supply (V_{CC}) is stable until the specific instruction can be issued. These parameters are periodically sampled and not 100% tested.

Equivalent AC Load Circuit

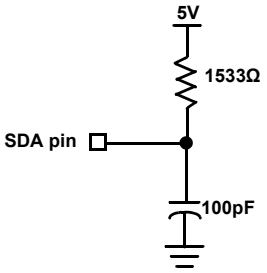

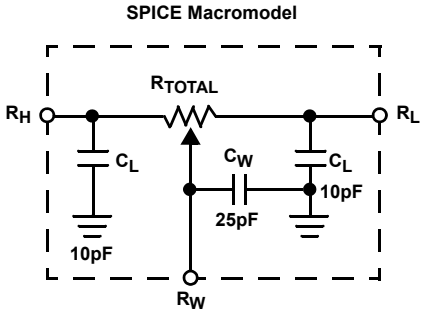

AC Timing

SYMBOL	PARAMETER	MIN	MAX	UNITS
f_{SCL}	Clock Frequency		400	kHz
t_{CYC}	Clock Cycle Time	2500		ns
t_{HIGH}	Clock High Time	600		ns
t_{LOW}	Clock Low Time	1300		ns
$t_{SU:STA}$	Start Setup Time	600		ns
$t_{HD:STA}$	Start Hold Time	600		ns
$t_{SU:STO}$	Stop Setup Time	600		ns
$t_{SU:DAT}$	SDA Data Input Setup Time	100		ns
$t_{HD:DAT}$	SDA Data Input Hold Time	30		ns
t_R	SCL and SDA Rise Time		300	ns
t_F	SCL and SDA Fall Time		300	ns
t_{AA}	SCL Low to SDA Data Output Valid Time		0.9	µs
t_{DH}	SDA Data Output Hold Time	0		ns
T_I	Noise Suppression Time Constant at SCL and SDA inputs	50		ns
t_{BUF}	Bus Free Time (Prior to Any Transmission)	1200		ns
$t_{SU:WPA}$	A0, A1 Setup Time	0		ns
$t_{HD:WPA}$	A0, A1 Hold Time	0		ns

High-Voltage Write Cycle Timing

SYMBOL	PARAMETER	TYP	MAX	UNITS
t_{WR}	High-voltage write cycle time (store instructions)	5	10	ms

XDCP Timing

SYMBOL	PARAMETER	MIN	MAX	UNITS
t_{WRPO}	Wiper response time after the third (last) power supply is stable	5	10	µs
t_{WRL}	Wiper response time after instruction issued (all load instructions)	5	10	µs

Symbol Table

WAVEFORM	INPUTS	OUTPUTS
	Must be steady	Will be steady
	May change from Low to High	Will change from Low to High
	May change from High to Low	Will change from High to Low
	Don't Care: Changes Allowed	Changing: State Not Known
	N/A	Center Line is High Impedance

Timing Diagrams

Start and Stop Timing

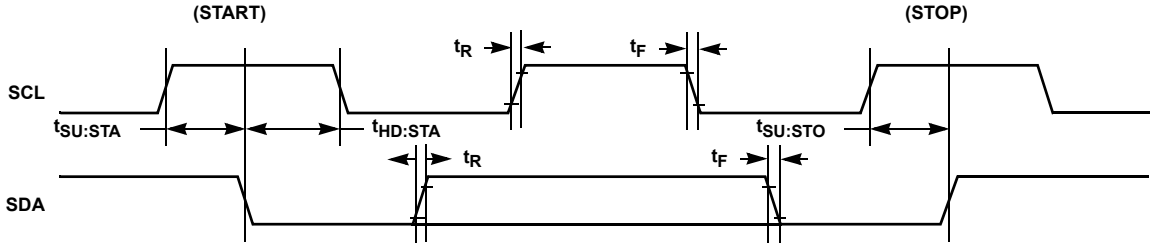

Input Timing

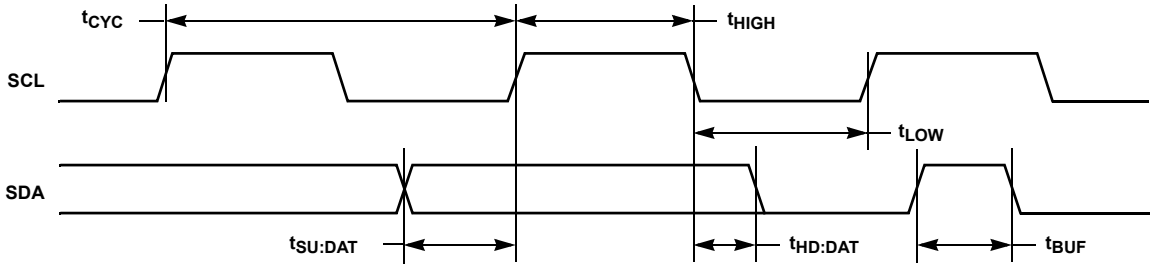

Output Timing

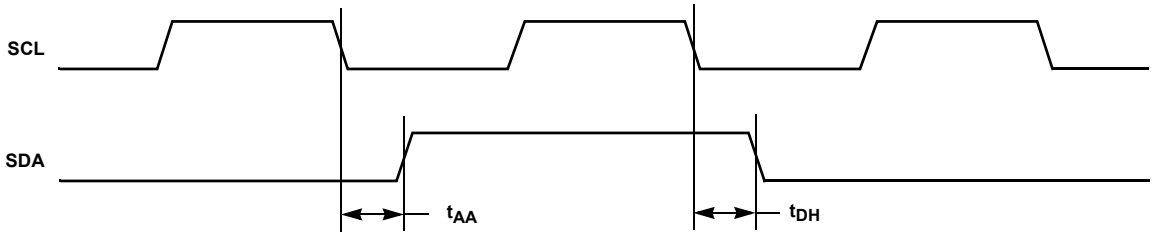

XDCP Timing (for All Load Instructions)

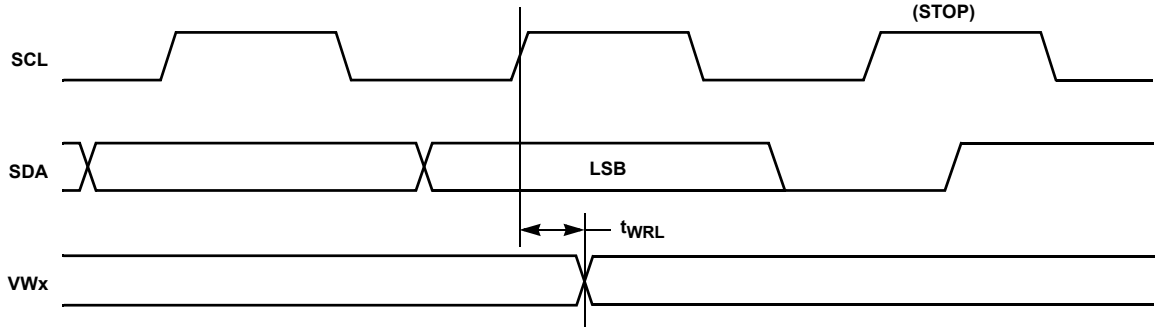

Write Protect and Device Address Pins Timing

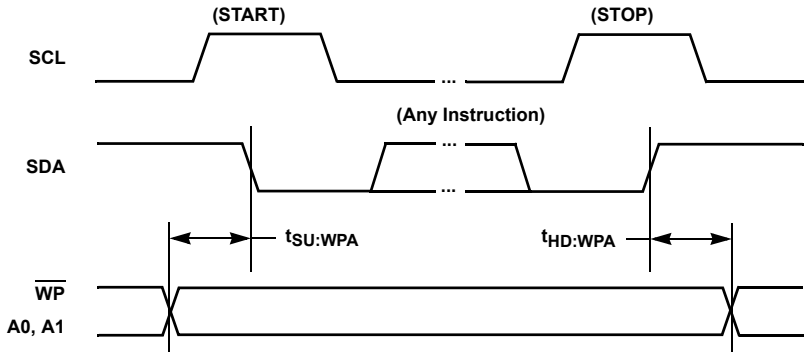

Applications Information

Basic Configurations of Electronic Potentiometers

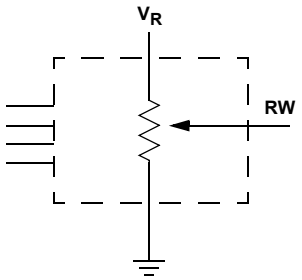

Three-terminal
Potentiometer;
Variable voltage divider

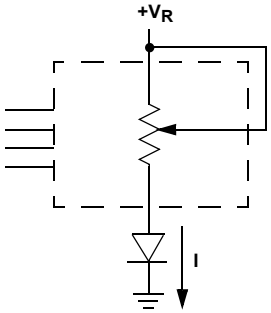

Two-terminal Variable
Resistor;
Variable current

Application Circuits

Non inverting Amplifier

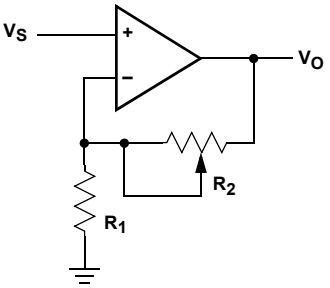

$V_O = (1+R_2/R_1)V_S$

Voltage Regulator

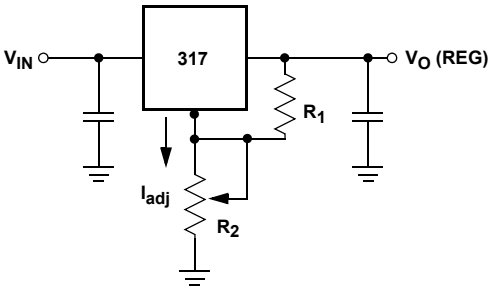

V_O (REG) = 1.25V $(1+R_2/R_1)+I_{adj}\ R_2$

Offset Voltage Adjustment

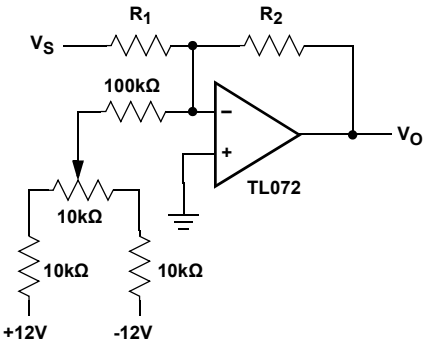

Comparator with Hysteresis

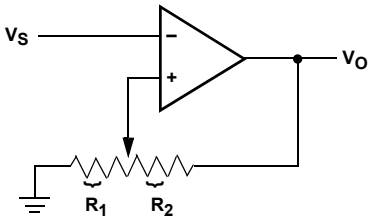

$V_{UL} = \{R_1/(R_1+R_2)\}\ V_O(max)$
$RL_L = \{R_1/(R_1+R_2)\}\ V_O(min)$

Application Circuits (continued)

Attenuator

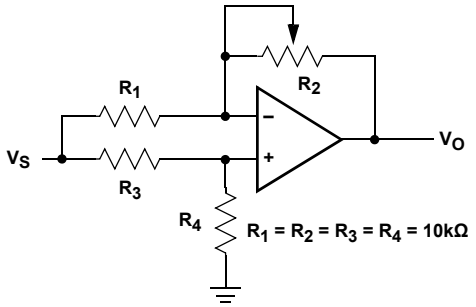

$V_O = G\ V_S$
$-1/2 \le G \le +1/2$

Filter

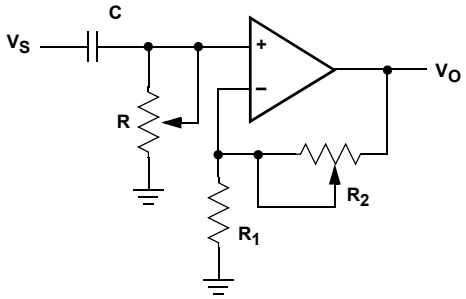

$G_O = 1 + R_2/R_1$
$fc = 1/(2\pi RC)$

Inverting Amplifier

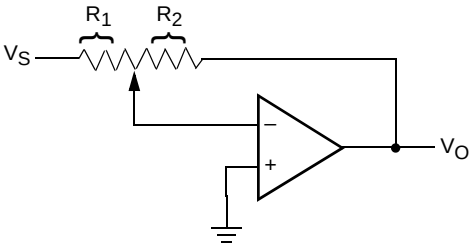

$V_O = G\ V_S$
$G = -R_2/R_1$

Equivalent L-R Circuit

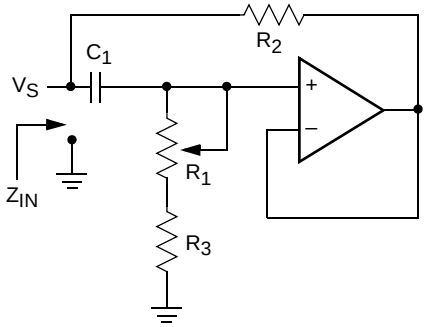

$Z_{IN} = R_2 + s\ R_2\ (R_1 + R_3)\ C_1 = R_2 + s\ Leq$
$(R_1 + R_3) >> R_2$

Function Generator

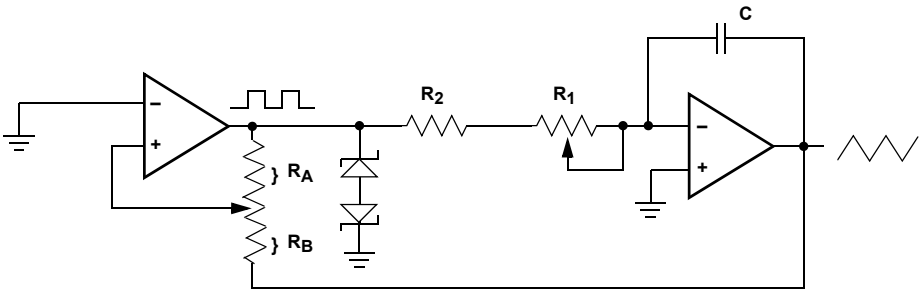

frequency $\propto R_1, R_2, C$
amplitude $\propto R_A, R_B$

Revision History

The revision history provided is for informational purposes only and is believed to be accurate, but not warranted. Please go to the web to make sure that you have the latest revision.

DATE	REVISION	CHANGE
December 12, 2014	FN8169.6	Updated Datasheet to Intersil new standards. Updated Ordering Information Table on page 2, by removing obsoleted parts and 100kΩ referenced parts, adding Note 3 and changed TSSOP POD references from “MDP0044” to “M24.173”. On page 3. in the Pin Descriptions table removed duplicate entry for Pin 6. Added Revision History and About Intersil Verbiage Updated M24.3 POD to the latest revision. -“Updated to new POD standard by removing table listing dimensions and putting dimensions on drawing. Added Land Pattern.” Replaced MDP0044 POD with M24.173 POD to update to new format and only show 24LD version.

About Intersil

Intersil Corporation is a leading provider of innovative power management and precision analog solutions. The company's products address some of the largest markets within the industrial and infrastructure, mobile computing and high-end consumer markets.

For the most updated datasheet, application notes, related documentation and related parts, please see the respective product information page found at www.intersil.com.

You may report errors or suggestions for improving this datasheet by visiting www.intersil.com/ask.

Reliability reports are also available from our website at www.intersil.com/support

For additional products, see www.intersil.com/en/products.html

Intersil products are manufactured, assembled and tested utilizing ISO9001 quality systems as noted in the quality certifications found at www.intersil.com/en/support/qualandreliability.html

Intersil products are sold by description only. Intersil Corporation reserves the right to make changes in circuit design, software and/or specifications at any time without notice. Accordingly, the reader is cautioned to verify that data sheets are current before placing orders. Information furnished by Intersil is believed to be accurate and reliable. However, no responsibility is assumed by Intersil or its subsidiaries for its use; nor for any infringements of patents or other rights of third parties which may result from its use. No license is granted by implication or otherwise under any patent or patent rights of Intersil or its subsidiaries.

For information regarding Intersil Corporation and its products, see www.intersil.com

Package Outline Drawing

M24.3

24 LEAD WIDE BODY SMALL OUTLINE PLASTIC PACKAGE (SOIC)

Rev 2, 3/11

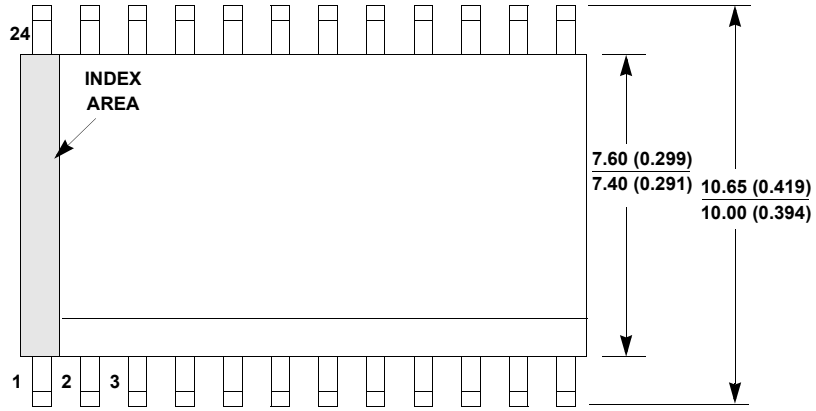

TOP VIEW

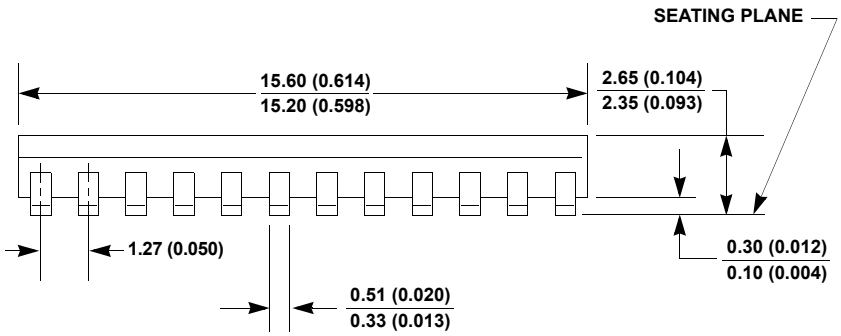

SIDE VIEW "A"

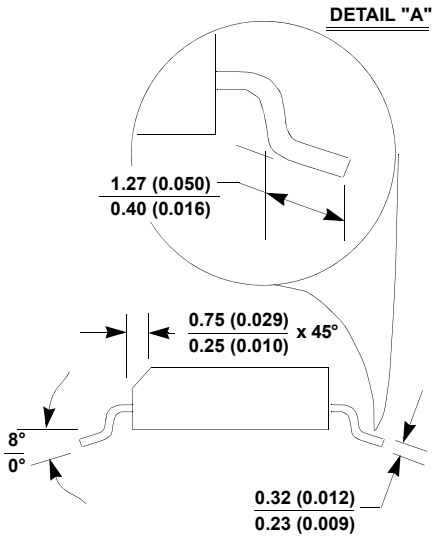

SIDE VIEW "B"

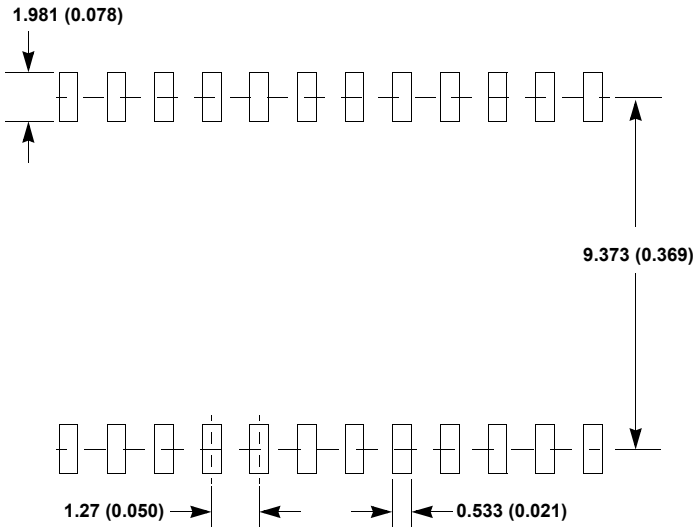

TYPICAL RECOMMENDED LAND PATTERN

NOTES:

1. Dimensioning and tolerancing per ANSI Y14.5M-1982.
2. Package length does not include mold flash, protrusions or gate burrs. Mold flash, protrusion and gate burrs shall not exceed 0.15mm (0.006 inch) per side.
3. Package width does not include interlead flash or protrusions. Interlead flash and protrusions shall not exceed 0.25mm (0.010 inch) per side.
4. The chamfer on the body is optional. If it is not present, a visual index feature must be located within the crosshatched area.
5. Terminal numbers are shown for reference only.
6. The lead width as measured 0.36mm (0.014 inch) or greater above the seating plane, shall not exceed a maximum value of 0.61mm (0.024 inch).
7. Controlling dimension: MILLIMETER. Converted inch dimensions in ( ) are not necessarily exact.
8. This outline conforms to JEDEC publication MS-013-AD ISSUE C.

Package Outline Drawing

M24.173

24 LEAD THIN SHRINK SMALL OUTLINE PACKAGE (TSSOP)
Rev 1, 5/10

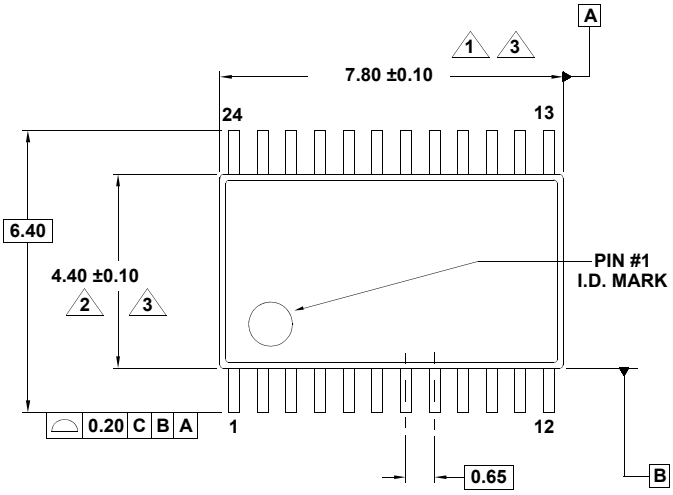

TOP VIEW

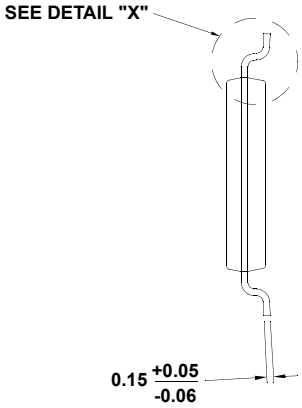

END VIEW

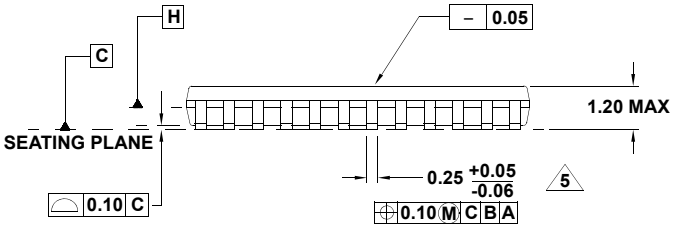

SIDE VIEW

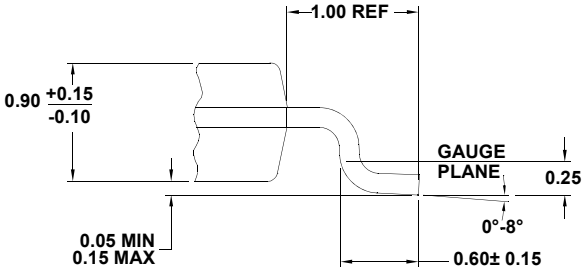

DETAIL "X"

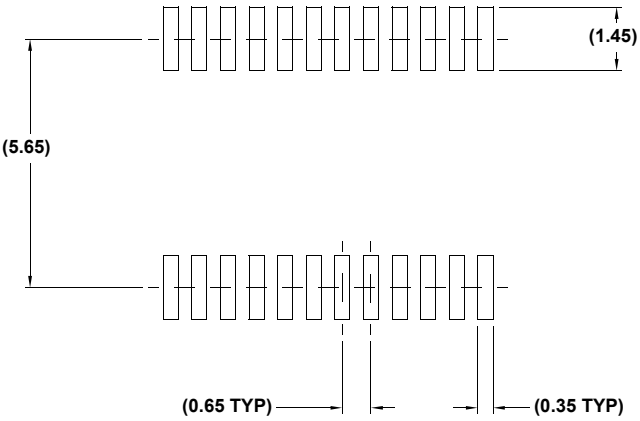

TYPICAL RECOMMENDED LAND PATTERN

NOTES:

1. Dimension does not include mold flash, protrusions or gate burrs. Mold flash, protrusions or gate burrs shall not exceed 0.15 per side.
2. Dimension does not include interlead flash or protrusion. Interlead flash or protrusion shall not exceed 0.25 per side.
3. Dimensions are measured at datum plane H.
4. Dimensioning and tolerancing per ASME Y14.5M-1994.
5. Dimension does not include dambar protrusion. Allowable protrusion shall be 0.08mm total in excess of dimension at maximum material condition. Minimum space between protrusion and adjacent lead is 0.07mm.
6. Dimension in ( ) are for reference only.
7. Conforms to JEDEC MO-153.