阅读申明

1.本站收集的数据手册和产品资料都来自互联网，版权归原作者所有。如读者和版权方有任何异议请及时告之，我们将妥善解决。
2.本站提供的中文数据手册是英文数据手册的中文翻译，其目的是协助用户阅读，该译文无法自动跟随原稿更新，同时也可能存在翻译上的不当。建议读者以英文原稿为参考以便获得更精准的信息。
3.本站提供的产品资料，来自厂商的技术支持或者使用者的心得体会等，其内容可能存在描叙上的差异，建议读者做出适当判断。
4.如需与我们联系，请发邮件到marketing@iczoom.com，主题请标有“数据手册”字样。

Read Statement

1. The datasheets and other product information on the site are all from network reference or other public materials, and the copyright belongs to the original author and original published source. If readers and copyright owners have any objections, please contact us and we will deal with it in a timely manner.

2. The Chinese datasheets provided on the website is a Chinese translation of the English datasheets. Its purpose is for reader’s learning exchange only and do not involve commercial purposes. The translation cannot be automatically updated with the original manuscript, and there may also be improper translations. Readers are advised to use the English manuscript as a reference for more accurate information.

3. All product information provided on the website refer to solutions from manufacturers’ technical support or users the contents may have differences in description, and readers are advised to take the original article as the standard.

4. If you have any questions, please contact us at marketing@iczoom.com and mark the subject with “Datasheets”.

Downloaded from www.iczoom.com

19-1582; Rev 2; 12/01

8-Bit, 40MHz, Current/Voltage-Output DACs

General Description

The MAX5187 is an 8-bit, current-output digital-to-analog converter (DAC) designed for superior performance in signal reconstruction or arbitrary waveform generation applications requiring analog signal reconstruction with low distortion and low-power operation. The voltage-output MAX5190 provides equal specifications, with on-chip precision resistors for voltage output operation. Both devices are designed for a 10pVs glitch operation to minimize unwanted spurious signal components at the output. An on-board +1.2V bandgap circuit provides a well-regulated, low-noise reference that can be disabled for external reference operation.

The MAX5187/MAX5190 are designed to provide a high level of signal integrity for the least amount of power dissipation. They operate from a single supply of +2.7V to +3.3V. Additionally, these DACs have three modes of operation: normal, low-power standby, and full shutdown, which provides the lowest possible power dissipation with a 1µA (max) shutdown current. A fast wake-up time (0.5µs) from standby mode to full DAC operation allows for power conservation by activating the DAC only when required.

The MAX5187/MAX5190 are packaged in a 24-pin QSOP and are specified for the extended (-40°C to +85°C) temperature range. For higher resolution, 10-bit versions, see the MAX5181/MAX5184 data sheet.

Applications

Signal Reconstruction

Digital Signal Processing

Arbitrary Waveform Generation (AWG)

Imaging Applications

Features

- **+2.7V to +3.3V Single-Supply Operation**
- **Wide Spurious-Free Dynamic Range: 70dB at f_{OUT} = 2.2MHz**
- **Fully Differential Output**
- **Low-Current Standby or Full Shutdown Modes**
- **Internal +1.2V Low-Noise Bandgap Reference**
- **Small 24-Pin QSOP Package**

Ordering Information

PART	TEMP. RANGE	PIN-PACKAGE
MAX5187BEEG	-40°C to +85°C	24 QSOP
MAX5190BEEG	-40°C to +85°C	24 QSOP

Pin Configuration

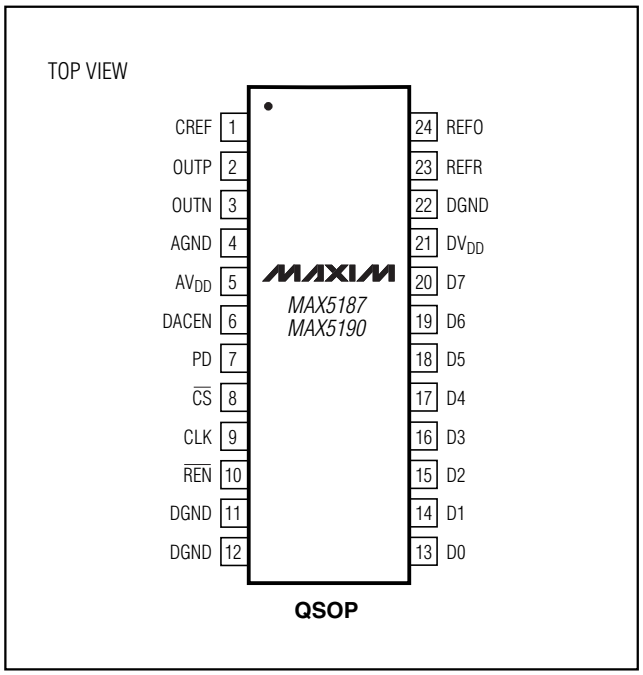

For pricing, delivery, and ordering information, please contact Maxim/Dallas Direct! at 1-888-629-4642, or visit Maxim's website at www.maxim-ic.com.

8-Bit, 40MHz, Current/Voltage-Output DACs

ABSOLUTE MAXIMUM RATINGS

AV_{DD}, DV_{DD} to AGND, DGND .....-0.3V to +6V
Digital Input to DGND.....-0.3V to +6V
OUTP, OUTN, CREF to AGND .....-0.3V to +6V
V_{REF} to AGND .....-0.3V to +6V
AGND to DGND.....-0.3V to +0.3V
AV_{DD} to DV_{DD}.....±3.3V
Maximum Current into Any Pin.....50mA

Continuous Power Dissipation (T_A = +70°C)
24-Pin QSOP (derate 9.50mW/°C above +70°C).....762mW
Operating Temperature Ranges
MAX5187BEEG/MAX5190BEEG .....-40°C to +85°C
Storage Temperature Range .....-65°C to +150°C
Lead Temperature (soldering, 10s) .....+300°C

Stresses beyond those listed under "Absolute Maximum Ratings" may cause permanent damage to the device. These are stress ratings only, and functional operation of the device at these or any other conditions beyond those indicated in the operational sections of the specifications is not implied. Exposure to absolute maximum rating conditions for extended periods may affect device reliability.

ELECTRICAL CHARACTERISTICS

(AV_{DD} = DV_{DD} = +3V ±10%, AGND = DGND = 0, f_{CLK} = 40MHz, I_{FS} = 1mA, 400Ω differential output, C_L = 5pF, T_A = T_{MIN} to T_{MAX}, unless otherwise noted. Typical values are at T_A = +25°C.)

PARAMETER	SYMBOL	CONDITIONS		MIN	TYP	MAX	UNITS
STATIC PERFORMANCE							
Resolution	N			8			Bits
Integral Nonlinearity	INL			-1	±0.25	+1	LSB
Differential Nonlinearity	DNL	Guaranteed monotonic		-1	±0.25	+1	LSB
Zero-Scale Error		MAX5182		-1		+1	LSB
		MAX5191		-4		+4	
Full-Scale Error		(Note 1)		-20	±4	+20	LSB
DYNAMIC PERFORMANCE							
Output Settling Time		To ±0.5LSB error band			25		ns
Glitch Impulse					10		pVs
Spurious-Free Dynamic Range to Nyquist	SFDR	f_{CLK} = 40MHz	f_{OUT} = 550kHz		72		dBc
			f_{OUT} = 2.2MHz, T_A = +25°C	57	70		
Total Harmonic Distortion to Nyquist	THD	f_{CLK} = 40MHz	f_{OUT} = 550kHz		-70		dB
			f_{OUT} = 2.2MHz, T_A = +25°C		-68	-63	
Signal-to-Noise Ratio to Nyquist	SNR	f_{CLK} = 40MHz	f_{OUT} = 550kHz		52		dB
			f_{OUT} = 2.2MHz, T_A = +25°C	46	52		
Clock and Data Feedthrough		All 0s to all 1s			50		nVs
Output Noise					10		pA/√Hz
ANALOG OUTPUT							
Full-Scale Output Voltage	V_{FS}				400		mV
Voltage Compliance of Output				-0.3		0.8	V
Output Leakage Current		DACEN = 0, MAX5187 only		-1		1	µA
Full-Scale Output Current	I_{FS}	MAX5187 only		0.5	1	1.5	mA
DAC External Output Resistor Load	R_L	MAX5187 only			400		Ω

ELECTRICAL CHARACTERISTICS (continued)

(AV_{DD} = DV_{DD} = +3V ±10%, AGND = DGND = 0, f_{CLK} = 40MHz, I_{FS} = 1mA, 400Ω differential output, C_L = 5pF, T_A = T_{MIN} to T_{MAX}, unless otherwise noted. Typical values are at T_A = +25°C.)

PARAMETER	SYMBOL	CONDITIONS	MIN	TYP	MAX	UNITS
REFERENCE						
Output Voltage Range	V_{REF}		1.12	1.2	1.28	V
Output Voltage Temperature Drift	TCV_{REF}			50		ppm/°C
Reference Output Drive Capability	I_{REFOUT}			10		µA
Reference Supply Rejection				0.5		mV/V
Current Gain (I_{FS} / I_{REF})				8		mA/mA
POWER REQUIREMENTS						
Analog Power-Supply Voltage	AV_{DD}		2.7		3.3	V
Analog Supply Current	I_{AVDD}	PD = 0, DACEN = 1, digital inputs at 0 or DV_{DD}		1.7	4	mA
Digital Power-Supply Voltage	DV_{DD}		2.7		3.3	V
Digital Supply Current	I_{DVDD}	PD = 0, DACEN = 1, digital inputs at 0 or DV_{DD}		4.2	5	mA
Standby Current	$I_{STANDBY}$	PD = 0, DACEN = 0, digital inputs at 0 or DV_{DD}		1	1.5	mA
Shutdown Current	I_{SHDN}	PD = 1, DACEN = X, digital inputs at 0 or DV_{DD} (X = don't care)		0.5	1	µA
LOGIC INPUTS AND OUTPUTS						
Digital Input Voltage High	V_{IH}		2			V
Digital Input Voltage Low	V_{IL}				0.8	V
Digital Input Current	I_{IN}	V_{IN} = 0 or DV_{DD}			±1	µA
Digital Input Capacitance	C_{IN}			10		pF
TIMING CHARACTERISTICS						
DAC DATA to CLK Rise Setup Time	t_{DS}		10			ns
DAC CLK Rise to DATA Hold Time	t_{DH}		0			ns
$\overline{CS}$ Fall to CLK Rise Time				5		ns
$\overline{CS}$ Fall to CLK Fall Time				5		ns
DACEN Rise Time to V_{OUT}				0.5		µs
PD Fall Time to V_{OUT}				50		µs
Clock Period	t_{CLK}		25			ns
Clock High Time	t_{CH}		10			ns
Clock Low Time	t_{CL}		10			ns

Note 1: Excludes reference and reference resistor (MAX5190) tolerance.

8-Bit, 40MHz, Current/Voltage-Output DACs

Typical Operating Characteristics

(AV_{DD} = DV_{DD} = +3V, AGND = DGND = 0, 400Ω differential output, I_{FS} = 1mA, C_L = 5pF, T_A = +25°C, unless otherwise noted.)

INTEGRAL NONLINEARITY vs. INPUT CODE

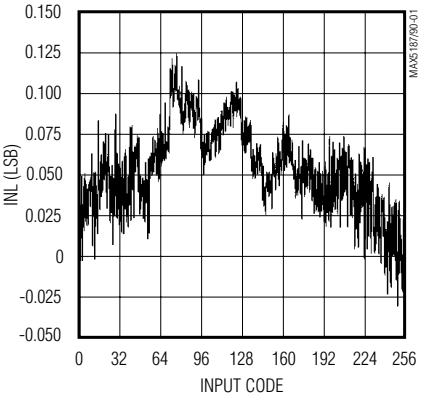

DIFFERENTIAL NONLINEARITY vs. INPUT CODE

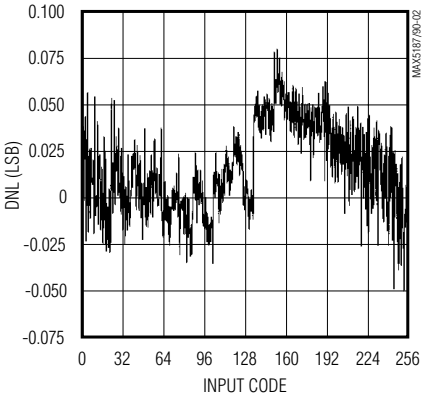

ANALOG SUPPLY CURRENT vs. SUPPLY VOLTAGE

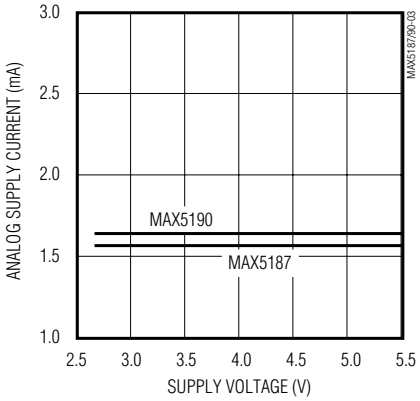

ANALOG SUPPLY CURRENT vs. TEMPERATURE

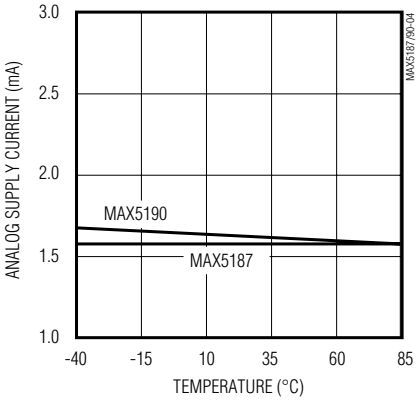

DIGITAL SUPPLY CURRENT vs. SUPPLY VOLTAGE

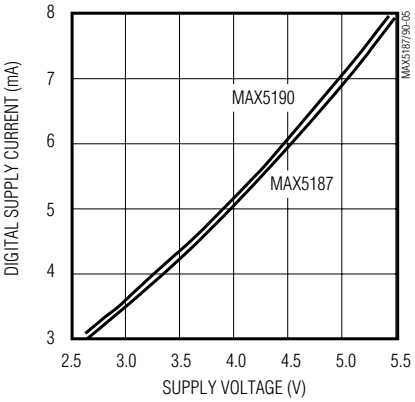

DIGITAL SUPPLY CURRENT vs. TEMPERATURE

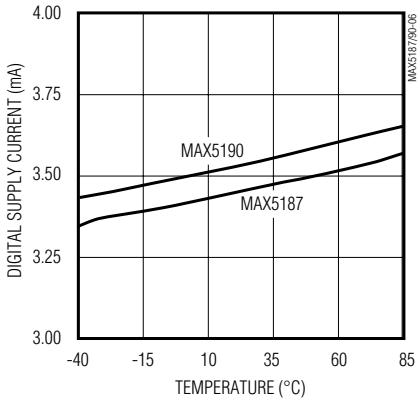

STANDBY CURRENT vs. SUPPLY VOLTAGE

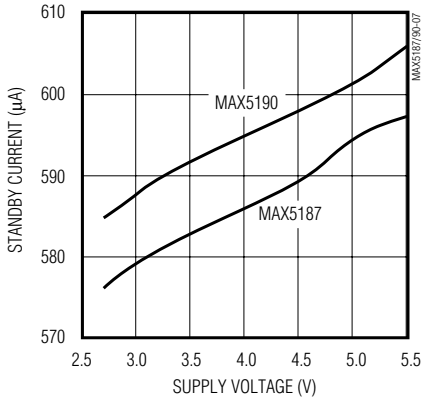

STANDBY CURRENT vs. TEMPERATURE

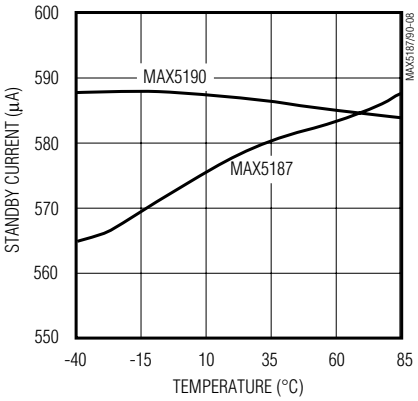

SHUTDOWN CURRENT vs. SUPPLY VOLTAGE

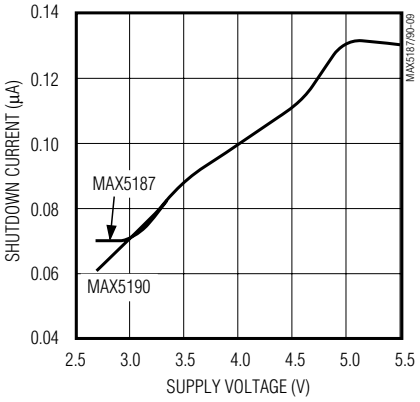

Typical Operating Characteristics (continued)

(AV_{DD} = DV_{DD} = +3V, AGND = DGND = 0, 400Ω differential output, I_{FS} = 1mA, C_L = 5pF, T_A = +25°C, unless otherwise noted.)

SHUTDOWN CURRENT vs. TEMPERATURE

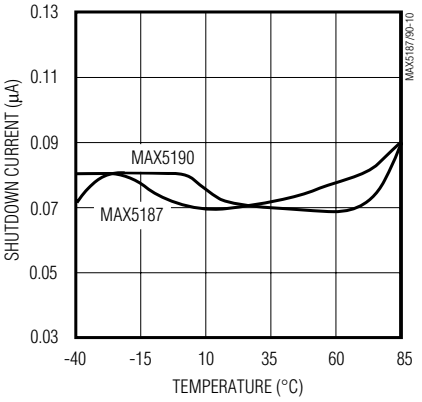

INTERNAL REFERENCE VOLTAGE vs. SUPPLY VOLTAGE

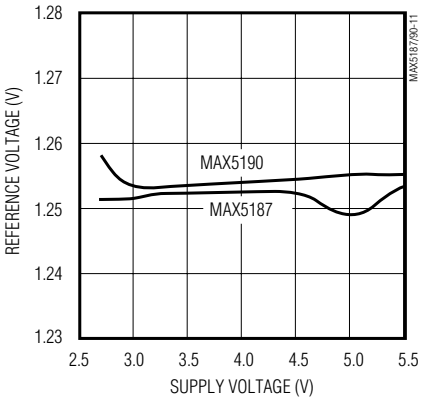

INTERNAL REFERENCE VOLTAGE vs. TEMPERATURE

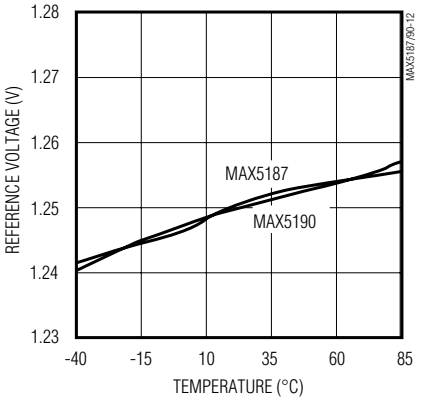

OUTPUT CURRENT vs. REFERENCE CURRENT

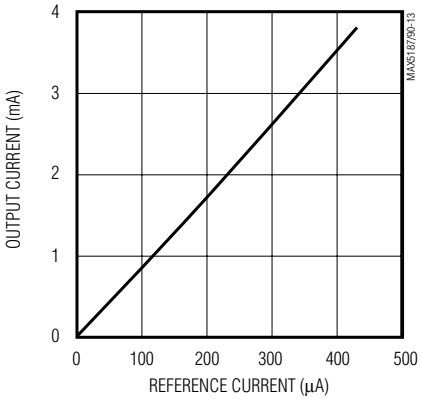

DYNAMIC RESPONSE RISE TIME

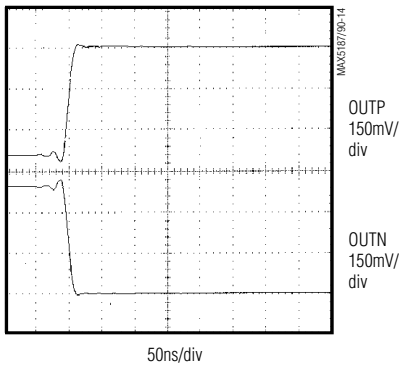

DYNAMIC RESPONSE FALL TIME

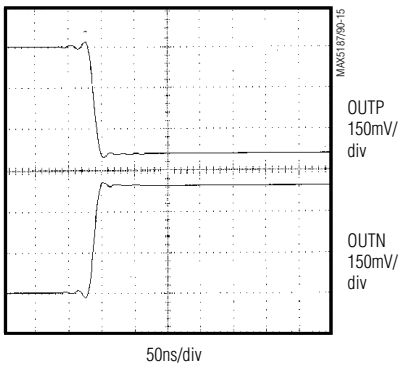

SETTLING TIME

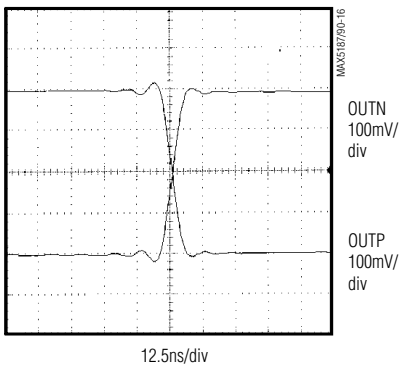

FFT PLOT

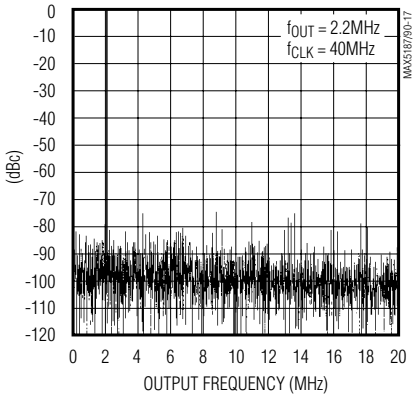

Typical Operating Characteristics (continued)

(AV_{DD} = DV_{DD} = +3V, AGND = DGND = 0, 400Ω differential output, I_{FS} = 1mA, C_L = 5pF, T_A = +25°C, unless otherwise noted.)

SPURIOUS-FREE DYNAMIC RANGE vs. CLOCK FREQUENCY

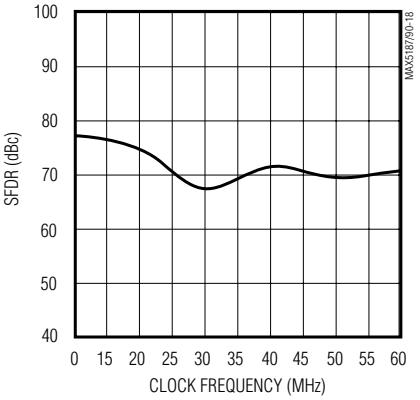

SPURIOUS-FREE DYNAMIC RANGE vs. OUTPUT FREQUENCY AND CLOCK FREQUENCY

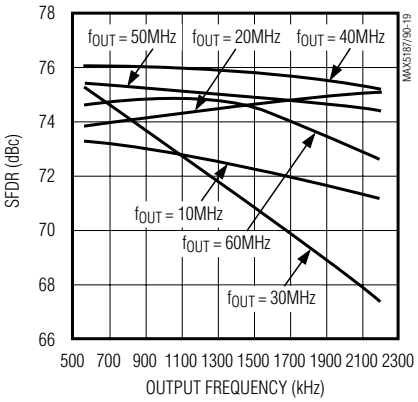

SIGNAL-TO-NOISE PLUS DISTORTION vs. OUTPUT FREQUENCY

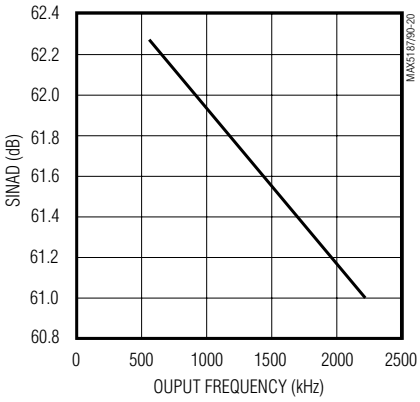

MULTITONE SPURIOUS-FREE DYNAMIC RANGE vs. OUTPUT FREQUENCY

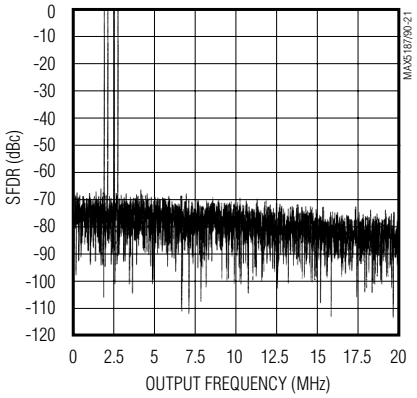

SPURIOUS-FREE DYNAMIC RANGE vs. FULL-SCALE OUTPUT CURRENT

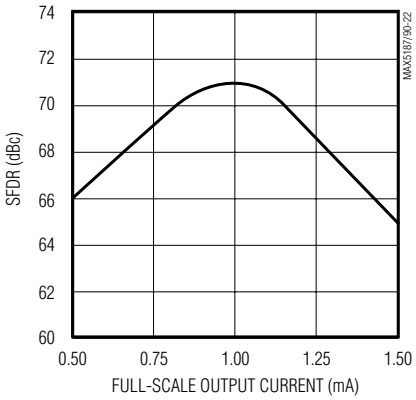

Pin Description

PIN	NAME	FUNCTION
1	CREF	Reference Bias Bypass
2	OUTP	Positive Analog Output. Current output for MAX5187; voltage output for MAX5190.
3	OUTN	Negative Analog Output. Current output for MAX5187; voltage output for MAX5190.
4	AGND	Analog Ground
5	AV_{DD}	Analog Positive Supply, +2.7V to +3.3V
6	DACEN	DAC Enable, Digital Input 0: Enter DAC standby mode with PD = DGND 1: Power-up DAC with PD = DGND X: Enter shutdown mode with PD = DV_{DD} (X = don't care)
7	PD	Power-Down Select 0: Enter DAC standby mode (DACEN = DGND) or power-up DAC (DACEN = DV_{DD}) 1: Enter shutdown mode
8	$\overline{CS}$	Active-Low Chip Select
9	CLK	Clock Input
10	$\overline{REN}$	Active-Low Reference Enable. Connect to DGND to activate on-chip +1.2V reference.
11, 12, 22	DGND	Digital Ground
13	D0	Data Bit D0 (LSB)
14–19	D1–D6	Data Bit D1–D6
20	D7	Data Bit D7 (MSB)
21	DV_{DD}	Digital Supply, +2.7V to +3.3V
23	REFR	Reference Input
24	REFO	Reference Output

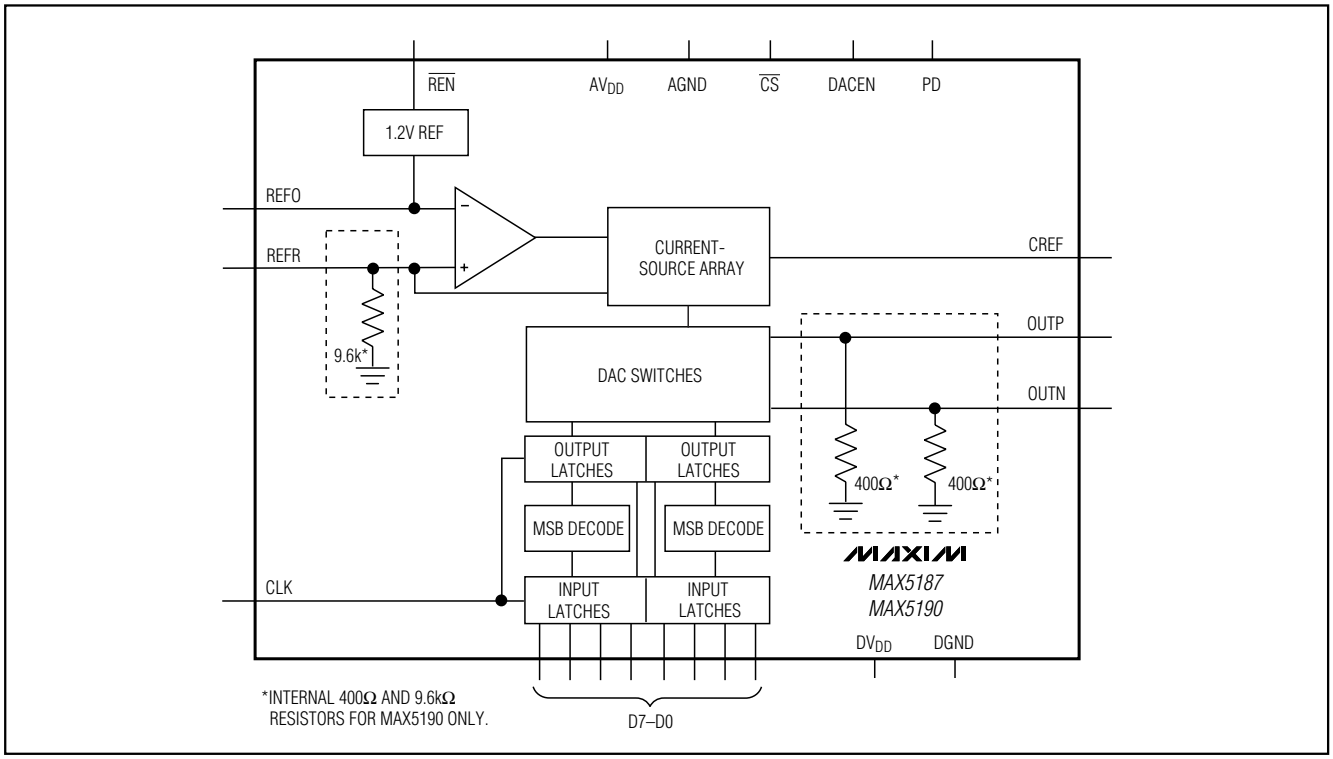

Figure 1. Functional Diagram

Detailed Description

The MAX5187/MAX5190 are 8-bit DACs capable of operating with clock speeds up to 40MHz. Each converter consists of separate input and DAC registers, followed by a current-source array capable of generating up to 1.5mA full-scale output current (Figure 1). An integrated +1.2V voltage reference and control amplifier determine the data converters' full-scale output currents/voltages. Careful reference design ensures close gain matching and excellent drift characteristics. The MAX5190's voltage-output operation features matched 400Ω on-chip resistors that convert the current array current into a voltage.

Internal Reference and Control Amplifier

The MAX5187/MAX5190 provide an integrated 50ppm/°C, +1.2V, low-noise bandgap reference that can be disabled and overridden by an external reference voltage. REFO serves either as an external reference input or an integrated reference output. If $\overline{REN}$ is connected to DGND, the internal reference is selected and REFO provides a +1.2V output. Due to its limited 10µA output drive capability, REFO must be buffered with an external amplifier if heavier loading is required.

The MAX5187/MAX5190 also employ a control amplifier, designed to simultaneously regulate the full-scale output current (I_{FS}) for both outputs of the devices. The output current is calculated as follows:

$$I_{FS} = 8 \times I_{REF}$$

where I_{REF} is the reference output current ($I_{REF} = V_{REFO} / R_{SET}$) and I_{FS} is the full-scale output current. R_{SET} is the reference resistor that determines the amplifier's output current on the MAX5187 (Figure 2). This current is mirrored into the current-source array, where it is equally distributed between matched current segments and summed to valid output current readings for the DACs.

The MAX5190 converts this output current into a differential output voltage (V_{OUT}) with two internal, ground-referenced 400Ω load resistors. Using the internal +1.2V reference voltage, the MAX5190's integrated reference output current resistor (R_{SET} = 9.6kΩ) sets I_{REF} to 125µA and I_{FS} to 1mA.

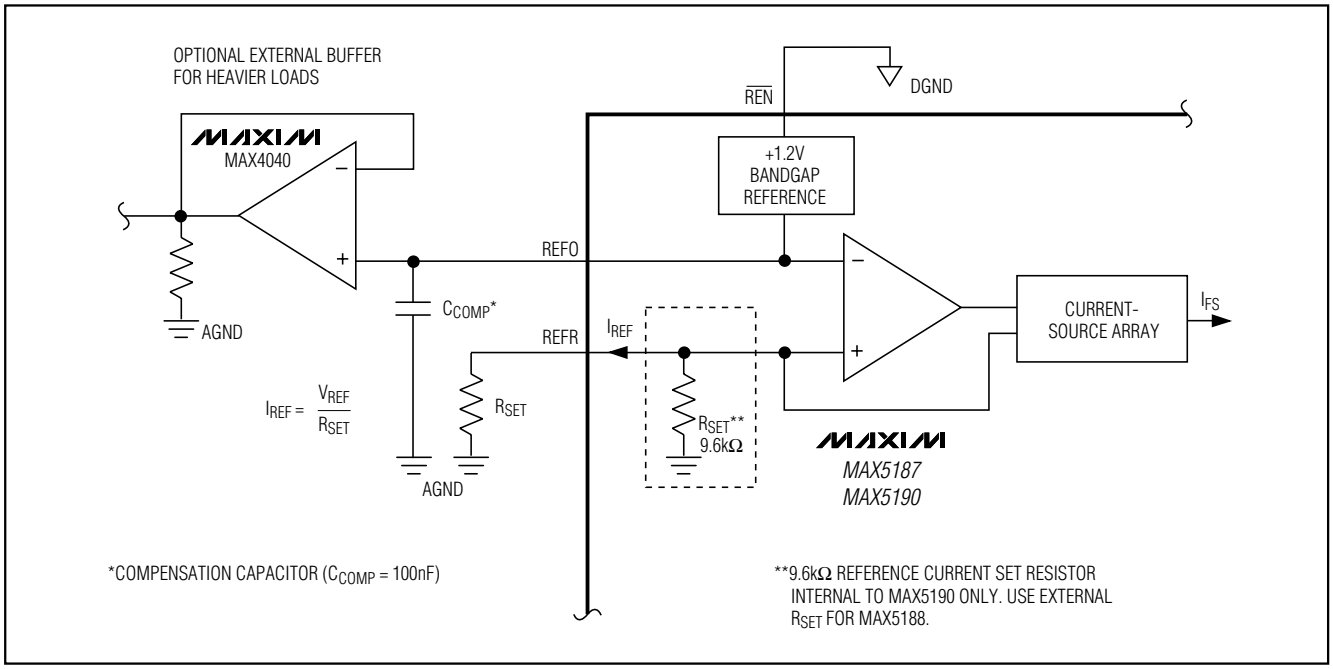

Figure 2. Setting I_{FS} with the Internal +1.2V Reference and the Control Amplifier

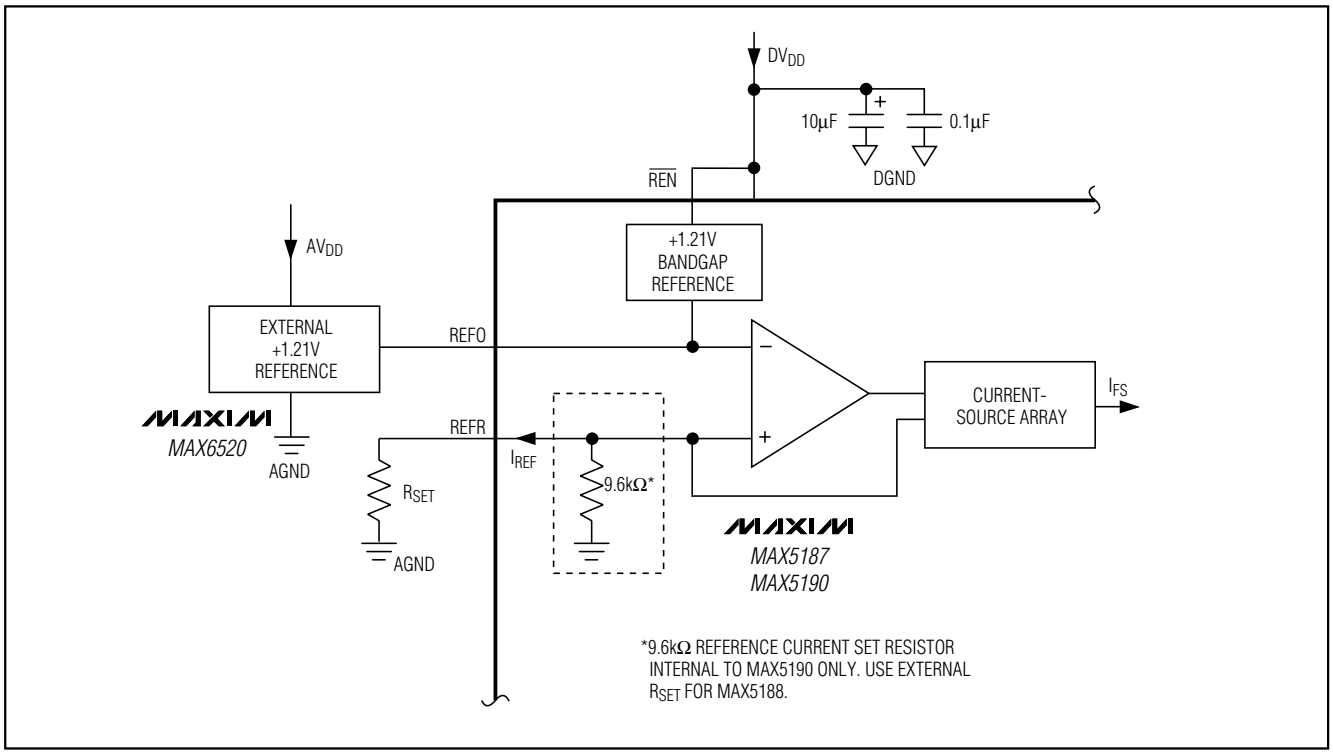

Figure 3. MAX5187/MAX5190 with External Reference

External Reference

To disable the MAX5187/MAX5190's internal reference, connect $\overline{REN}$ to DV_{DD}. A temperature-stable external reference may now be applied to drive the REFO pin to set the full-scale output (Figure 3). Choose a reference that can supply at least 150µA to drive the bias circuit that generates the cascode current for the current array. For improved accuracy and drift performance, choose a voltage reference with a fixed output voltage, such as the +1.2V, 25ppm/°C MAX6520 bandgap reference.

Standby Mode

To enter the lower power standby mode, connect the digital inputs PD and DACEN to DGND. In standby, both the reference and the control amplifier are active with the current array inactive. To exit this condition, DACEN must be pulled high with PD held at DGND. Both the MAX5187 and MAX5190 typically require 50µs to wake up and allow both the outputs and the reference to settle.

Shutdown Mode

For lowest power consumption, the MAX5187/MAX5190 provide a power-down mode in which the reference, control amplifier, and current array are inactive and the DAC's supply current is reduced to 1µA. To enter this mode, connect PD to DV_{DD}. To return to active mode, connect PD to DGND and DACEN to DV_{DD}. About 50µs are required for the parts to leave shutdown mode and settle to their outputs' values prior to shutdown.

Timing Information

Figure 4 shows a detailed timing diagram for the MAX5187/MAX5190. With each high transition of the clock, the input latch is loaded with the digital value set by bits D7 through D0. The content of the input latch is then shifted to the DAC register, and the output updates at the rising edge of the next clock.

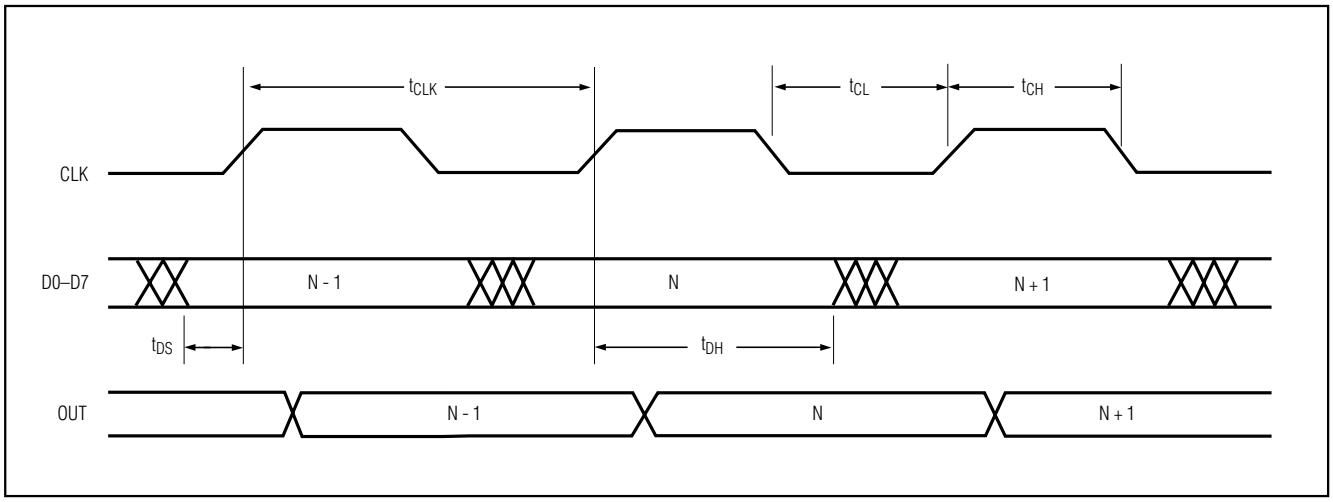

Figure 4. Timing Diagram

Table 1. Power-Down Mode Selection

PD (POWER-DOWN SELECT)	DACEN (DAC ENABLE)	POWER-DOWN MODE	OUTPUT STATE	
0	0	Standby	MAX5187	High-Z
			MAX5190	AGND
0	1	Wake-Up	Last state prior to standby mode	
1	X	Shutdown	MAX5187	High-Z
			MAX5190	AGND

X = Don't care

Outputs

The MAX5187 output is designed to supply full-scale output currents of 1mA into 400Ω loads in parallel with a capacitive load of 5pF. The MAX5190 features integrated 400Ω resistors that restore the array current to proportional, differential voltages of 400mV. These differential output voltages can then be used to drive a balun transformer or a low-distortion, high-speed operational amplifier to convert the differential voltage into a single-ended voltage.

Applications Information

Static and Dynamic Performance Definitions

Integral Nonlinearity

Integral nonlinearity (INL) (Figure 5a) is the deviation of the values on an actual transfer function from either a best-straight-line fit (closest approximation to the actual transfer curve) or a line drawn between the endpoints of the transfer function once offset and gain errors have been nullified. For a DAC, the deviations are measured every single step.

Differential Nonlinearity

Differential nonlinearity (DNL) (Figure 5b) is the difference between an actual step height and the ideal value of 1LSB. A DNL error specification of less than 1LSB guarantees no missing codes and a monotonic transfer function.

Offset Error

Offset error (Figure 5c) is the difference between the ideal and the actual offset point. For a DAC, the offset point is the step value when the digital input is zero. This error affects all codes by the same amount and can usually be compensated by trimming.

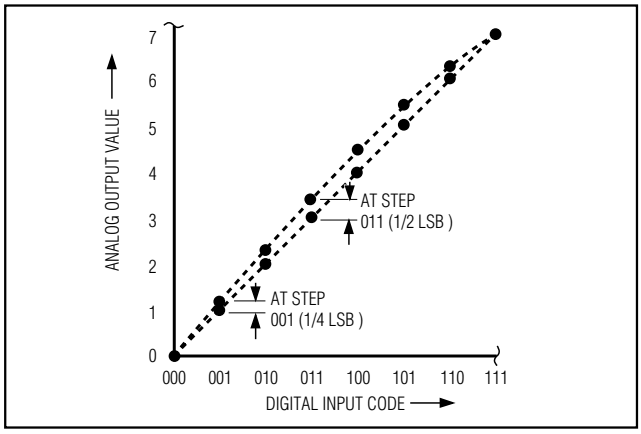

Figure 5a. Integral Nonlinearity

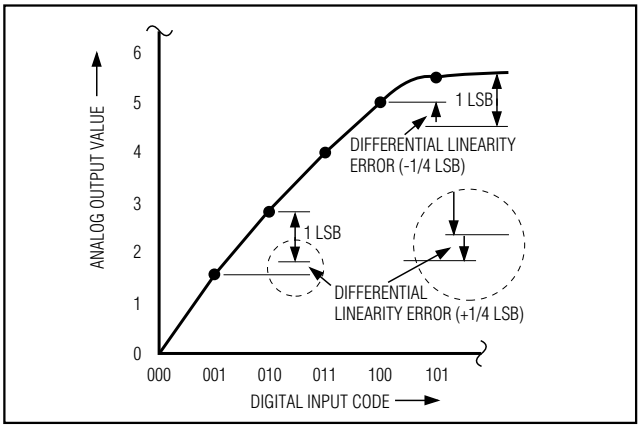

Figure 5b. Differential Nonlinearity

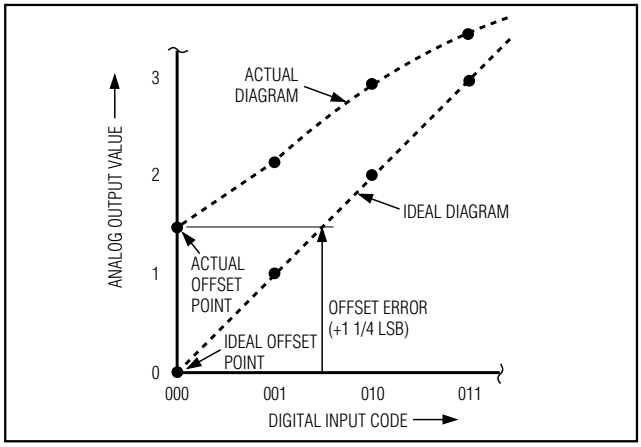

Figure 5c. Offset Error

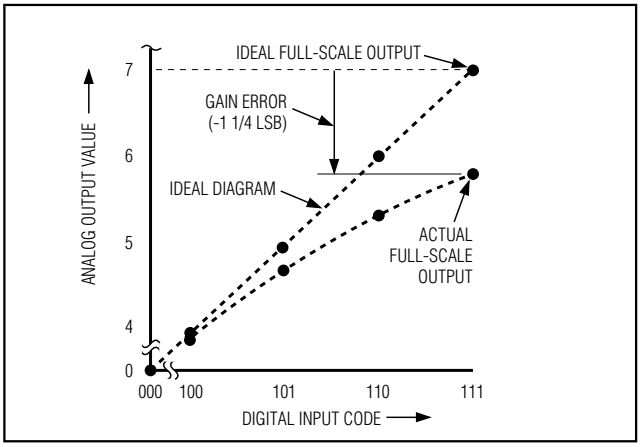

Figure 5d. Gain Error

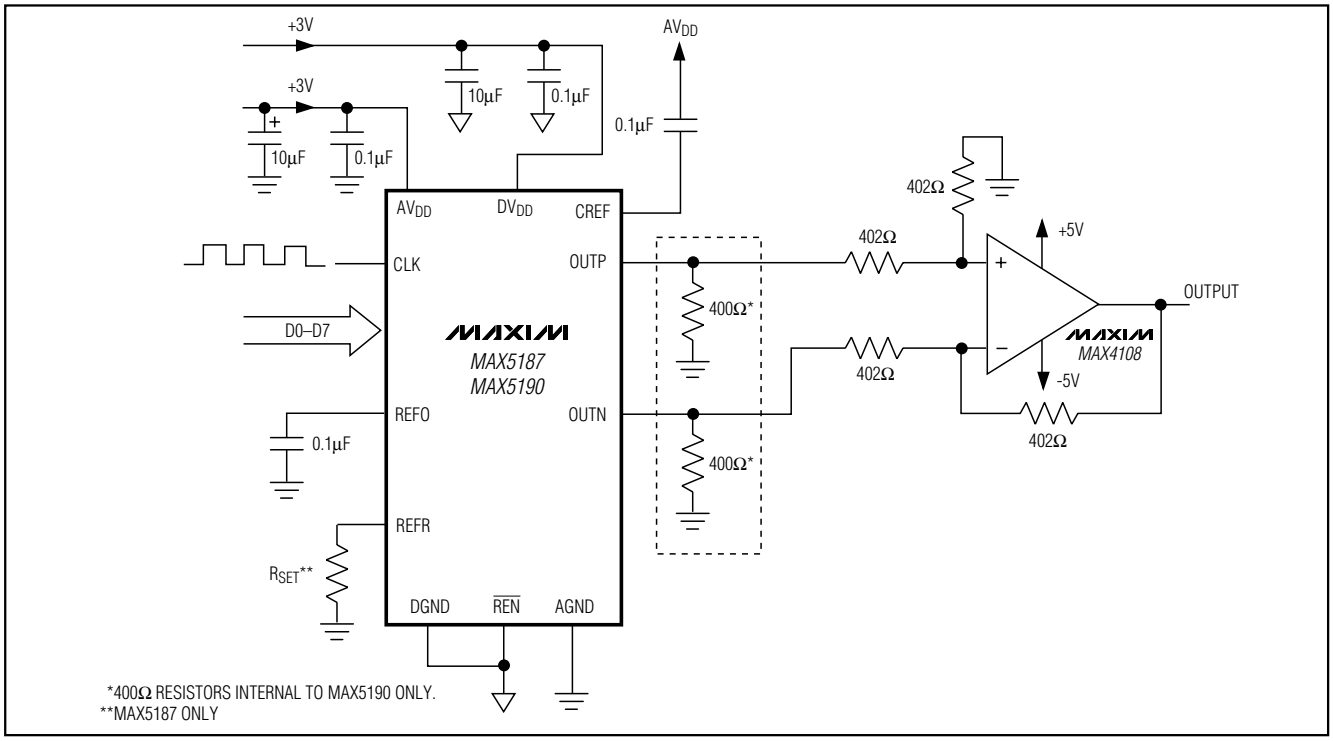

Figure 6. Differential to Single-Ended Conversion Using a Low-Distortion Amplifier

Gain Error

Gain error (Figure 5d) is the difference between the ideal and the actual full-scale output voltage on the transfer curve, after nullifying the offset error. This error alters the slope of the transfer function and corresponds to the same percentage error in each step.

Settling Time

Settling time is the amount of time required from the start of a transition until the DAC output settles its new output value to within the converter's specified accuracy.

Digital Feedthrough

Digital feedthrough is the noise generated on a DAC's output when any digital input transitions. Proper board layout and grounding will significantly reduce this noise, but there will always be some feedthrough caused by the DAC itself.

Total Harmonic Distortion

Total harmonic distortion (THD) is the ratio of the RMS sum of the input signal's first four harmonics to the fundamental itself. This is expressed as:

$$THD = 20 \times \log\left(\frac{\sqrt{V_2^2 + V_3^2 + V_4^2 + V_5^2}}{V_1}\right)$$

where V_1 is the fundamental amplitude, and V_2 through V_5 are the amplitudes of the 2nd- through 5th-order harmonics.

Spurious-Free Dynamic Range

Spurious-free dynamic range (SFDR) is the ratio of RMS amplitude of the fundamental (maximum signal component) to the RMS value of the next-largest distortion component.

Differential to Single-Ended Conversion

The MAX4108 low-distortion, high-input bandwidth amplifier may be used to generate a voltage from the array current output of the MAX5187. The differential voltage across OUTP and OUTN is converted into a single-ended voltage by designing an appropriate operational amplifier configuration (Figure 6).

I/Q Reconstruction in a QAM Application

The low-distortion performance of two MAX5187/MAX5190s supports analog reconstruction of in-phase (I) and quadrature (Q) carrier components typically used in quadrature amplitude modulation (QAM) architectures, where two separate buses carry the I and Q data. A QAM signal is both amplitude and phase modulated, created by summing two independently modulated carriers of identical frequency but different phase (90° phase difference).

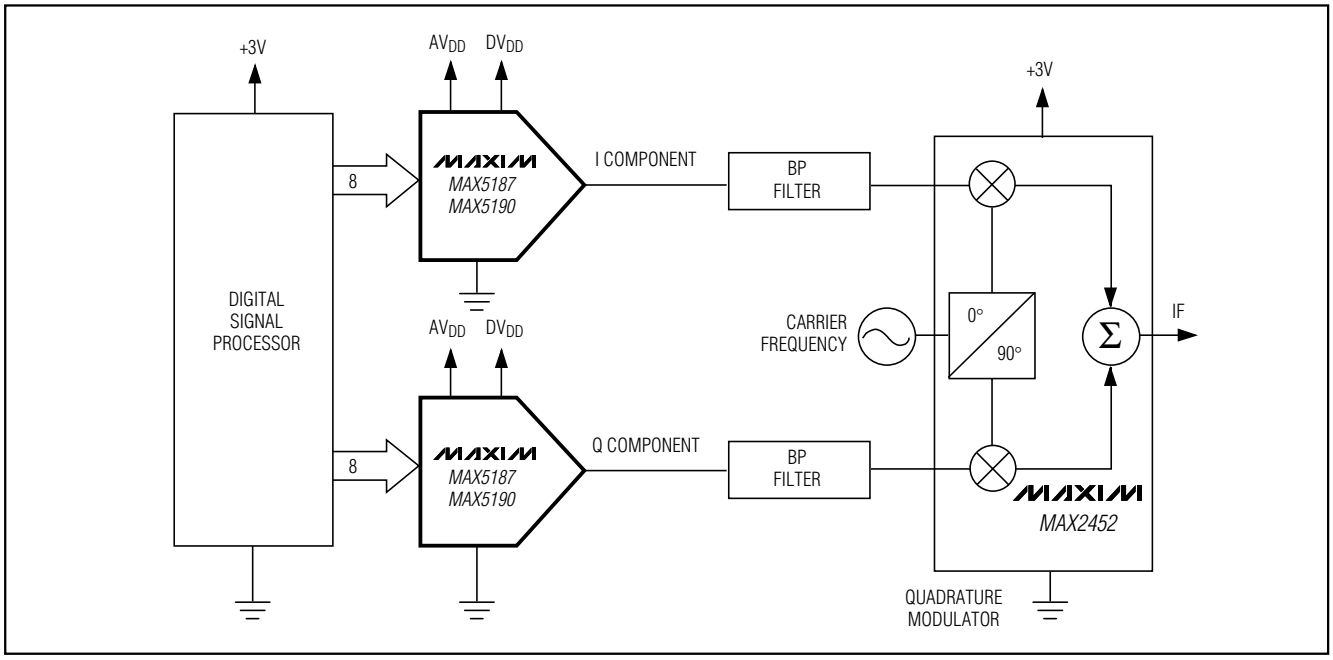

Figure 7. Using the MAX5187/MAX5190 for I/Q Signal Reconstruction

In a typical QAM application (Figure 7), the modulation occurs in the digital domain, and two DACs such as the MAX5187/MAX5190 may be used to reconstruct the analog I and Q components.

The I/Q reconstruction system is completed by a quadrature modulator that combines the reconstructed components with in-phase and quadrature carrier frequencies and then sums both outputs to provide the QAM signal.

Using the MAX5187/MAX5190 for Arbitrary Waveform Generation

Designing a traditional AWG requires five major functional blocks (Figure 8a): clock generator, counter, waveform memory, digital-to-analog converter for waveform reconstruction, and output filter. The waveform memory contains a sequentially stored digital replica of the desired analog waveforms. This memory shares a common clock with the DAC.

For each clock cycle, a counter adds one count to the address for the waveform memory. The memory then loads the next value to the DAC, which generates an analog output voltage corresponding to that data value until the next clock cycle. A DAC output filter can either be a simple or complex lowpass filter, depending on the AWG requirements for waveform function and frequencies. The main limitations of the AWG's flexibility are DAC resolution and dynamic performance, memory length, clock/playback frequency, and filter characteristics.

Although the MAX5187/MAX5190 offer high-frequency operation and excellent dynamics, they are suitable for relaxed requirements in resolution (8-bit AWGs). To increase an AWG's high-frequency accuracy, temperature stability, wideband tuning, and past phase continuous-frequency switching, the user may approach a direct digital synthesis (DDS) AWG (Figure 8b). This DDS loop supports standard waveforms that are repetitive, such as sine, square, TTL, and triangular waveforms. DDS allows for precise control of the data stream input to the DAC. Data for one complete output waveform cycle is sequentially stored in RAM. As the RAM addresses change, the DAC converts the incoming data bits into a corresponding voltage waveform. The resulting output signal frequency is proportional to the frequency rate at which the RAM addresses are changed.

Grounding and Power-Supply Decoupling

Grounding and power-supply decoupling strongly influence the MAX5187/MAX5190's performance. Unwanted digital crosstalk may couple through the input, reference, power-supply, and ground connections, which may affect dynamic specifications like signal-to-noise ratio or spurious-free dynamic range. In addition, electromagnet-

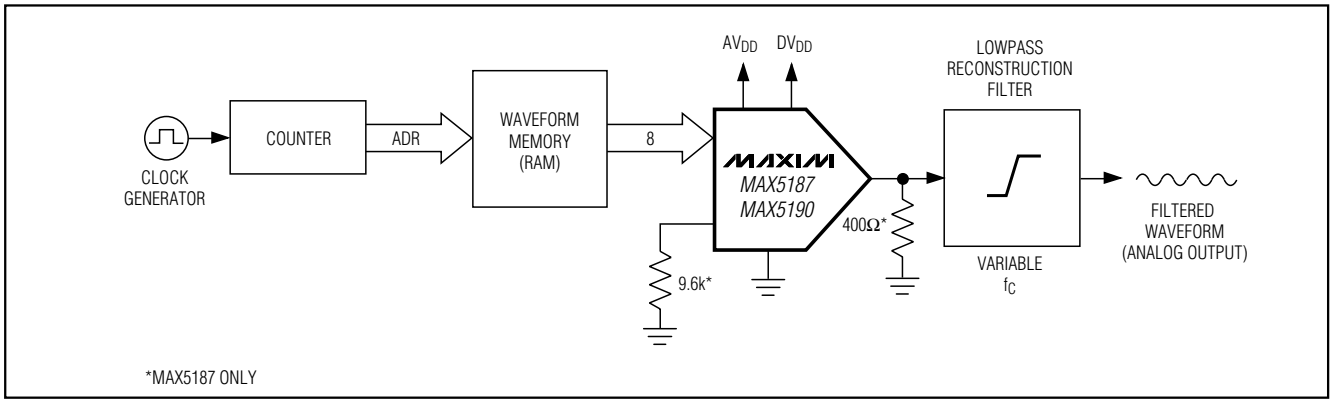

Figure 8a. Traditional Arbitrary Waveform Generation (AWG)

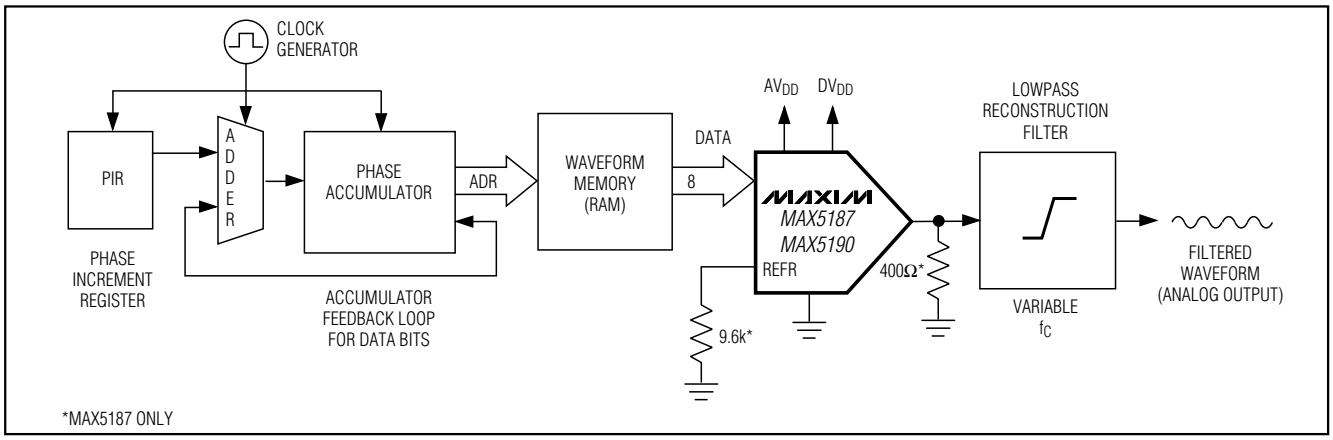

Figure 8b. Direct Digital Synthesis AWG (DDS AWG)

ic interference (EMI) can either couple into or be generated by the MAX5187/MAX5190. Therefore, grounding and power-supply decoupling guidelines for high-speed, high-frequency applications should be closely followed.

First, a multilayer PC board with separate ground and power-supply planes is recommended. High-speed signals should be run on controlled impedance lines directly above the ground plane. Since the MAX5187/MAX5190 have separate analog and digital ground buses (AGND and DGND, respectively), the PC board should also have separate analog and digital ground sections with only one point connecting the two. Digital signals should run above the digital ground plane, and analog signals should run above the analog ground plane.

Both devices have two power-supply inputs: analog V_{DD} (AV_{DD}) and digital V_{DD} (DV_{DD}). Each AV_{DD} input should be decoupled with parallel 10µF and 0.1µF ceramic chip capacitors. These capacitors should be as close to the pin as possible, and their opposite ends should be as close as possible to the ground plane. The DV_{DD} pins should also have separate 10µF and 0.1µF capacitors adjacent to their respective pins. Try to minimize the analog load capacitance for proper operation. For best performance, bypass with low-ESR 0.1µF capacitors to AV_{DD}.

The power-supply voltages should also be decoupled with large tantalum or electrolytic capacitors at the point they enter the PC board. Ferrite beads with additional decoupling capacitors forming a pi-network can also improve performance.

Chip Information

TRANSISTOR COUNT: 9464

SUBSTRATE CONNECTED TO AGND

Package Information

QSOP.EPS

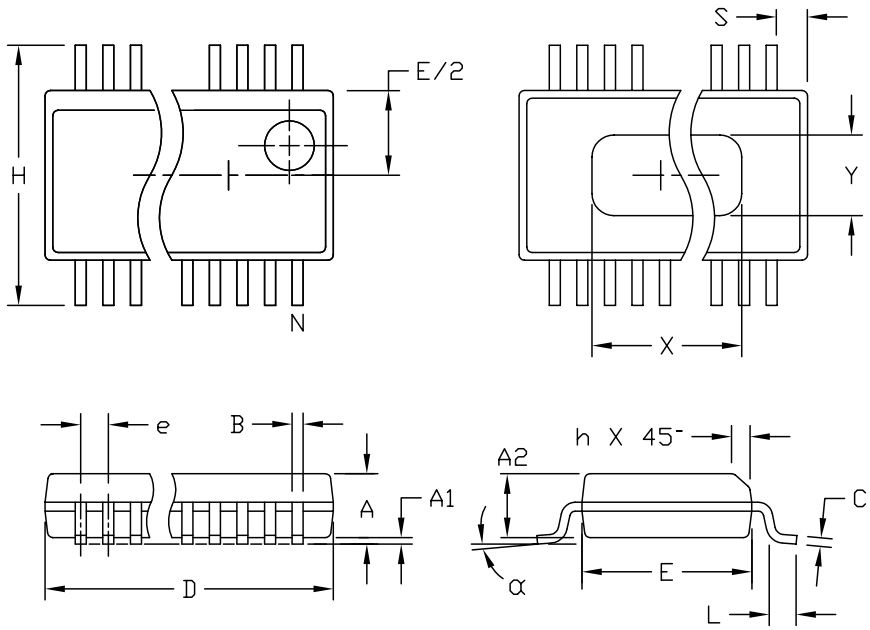

DIM	INCHES MIN	INCHES MAX	MILLIMETERS MIN	MILLIMETERS MAX
A	.061	.068	1.55	1.73
A1	.004	.0098	0.102	0.249
A2	.055	.061	1.40	1.55
B	.008	.012	0.20	0.31
C	.0075	.0098	0.191	0.249
D	SEE VARIATIONS			
E	.150	.157	3.81	3.99
e	.025 BSC		0.635 BSC	
H	.230	.244	5.84	6.20
h	.010	.016	0.25	0.41
L	.016	.035	0.41	0.89
N	SEE VARIATIONS			
X	SEE VARIATIONS			
Y	.071	.087	1.803	2.209
α	0°	8°	0°	8°

VARIATIONS:

	INCHES MIN.	INCHES MAX.	MILLIMETERS MIN.	MILLIMETERS MAX.	N	
D	.189	.196	4.80	4.98	16	AA
S	.0020	.0070	0.05	0.18		
X	.107	.123	2.72	3.12		
D	.337	.344	8.56	8.74	20	AB
S	.0500	.0550	1.270	1.397		
D	.337	.344	8.56	8.74	24	AC
S	.0250	.0300	0.635	0.762		
D	.386	.393	9.80	9.98	28	AD
S	.0250	.0300	0.635	0.762		
X	.271	.287	6.88	7.29		

NOTES:
1. D & E DO NOT INCLUDE MOLD FLASH OR PROTRUSIONS.
2. MOLD FLASH OR PROTRUSIONS NOT TO EXCEED .006" PER SIDE.
3. HEAT SLUG DIMENSIONS X AND Y APPLY ONLY TO 16 AND 28 LEAD POWER-QSOP PACKAGES.
4. CONTROLLING DIMENSIONS: INCHES.
5. MEETS JEDEC MO137.

MAXIM

PROPRIETARY INFORMATION

TITLE:

PACKAGE OUTLINE, QSOP, .150", .025" LEAD PITCH

APPROVAL	DOCUMENT CONTROL NO.	REV	
	21-0055	C	1/1

Maxim cannot assume responsibility for use of any circuitry other than circuitry entirely embodied in a Maxim product. No circuit patent licenses are implied. Maxim reserves the right to change the circuitry and specifications without notice at any time.

© 2001 Maxim Integrated Products Printed USA MAXIM is a registered trademark of Maxim Integrated Products.